arXiv:1305.4889v1 [math.AP] 21 May 2013

From microscopic theory to macroscopic theory: a systematic study on static modeling for liquid crystals

Jiequn Han[†], Yi Luo[†*], Wei Wang[‡] and Pingwen Zhang[†*]

[†] LMAM & School of Mathematical Sciences, Peking University, China

[‡] Beijing International Center for Mathematical Research, Peking University, China

[*] E-mail: royluo_rv@gmail.com, pzhang@pku.edu.cn

May 22, 2013

Abstract

In this paper, we propose a systematic way of liquid crystal modeling to build connection between microscopic theory and macroscopic theory. A new Q-tensor theory based on Onsager's molecular theory which leads to liquid crystals with certain shape has been proposed. Making uniaxial assumption, we can recover the Oseen-Frank theory from the derived Q-tensor theory, and the Oseen-Frank model coefficients can be examined. In addition, the smectic-A phase can also be characterized by the derived macroscopic model.

Contents

1 Introduction **2**

2 A systematic way of static modeling of liquid crystals **4**
2.1 Summary of the three-scale Schema for LC modeling 8

3 Modeling for nematic liquid crystals for rod-like molecule **9**
3.1 The bulk energy in Q-tensor form 10
3.2 The elastic energy in Q-tensor form 12
3.3 A brief look at our new Q-tensor model 15
3.3.1 Comparisons with the Landau-de Gennes Q-tensor theory 17
3.4 The elastic coefficients under uniaxial constrain 19
3.4.1 Derivation of the elastic coefficients 19
3.4.2 The comparative relationship among the Oseen-Frank elastic constants 20
3.5 The Ericksen's vector model 22

4 Modeling for simple smectic liquid crystals **23**
4.1 A tensor model for smectic-A phase 23
4.2 One-dimensional model and numerical results 25
4.3 Discussion on smectics modeling 27

5 Summary **29**

6 Appendix **29**
6.1 High order traceless symmetric tensor 29
6.2 The calculation of the zero-th, second and fourth moment for the hard-core interaction potential 31
6.3 The derivation of the elastic energy in the Q-tensor form 38
6.4 Calculation of coefficients in Oseen-Frank energy deduced from the tensor model 42

1 Introduction

Liquid crystal (LC) phases are mesomorphic states between ordinary liquid and crystal. The constituent LC molecules translate freely as in a liquid while exhibiting some long-range order above a critical concentration (lyotropic) or below a critical temperature (thermotropic). The anisotropic properties make LC suitable for a wide range of commercial applications. However, the inability to sufficiently control the degradation of orientational order that LC display in the liquid state remains a great loss in potentially more important applications. This fact highlights the need of establishing a simple and comprehensive mathematical model to capture main characteristics of different LC phases and describe phase transition and defects.

The static LC models can be classified into three levels: the molecular models, the tensor models and the vector models. The first kind is microscopic theory, while the other two are macroscopic theories. We shall begin by briefly reviewing these models.

The molecular models are based on the statistical theories of LC. In these models, the molecule has a continuous distribution of orientations which corresponds to the actual physical situation. However, the statistical mechanics of LC is so difficult that even for the simplest physical models, exact solution is very hard to work out. Onsager [34] discussed the statistics of a hard-rod system, and used a variational approximation to deal with the non-linear integral equations. By making an additional approximation of the uniaxial mean-field, Maier and Saupe [31, 32] suggested an analytic thermodynamic potential. A similar mean-field approximation to the Maier-Saupe theory was presented by Doi [13]. Most of the subsequent studies are based on the Maier-Saupe potential, such as the McMillan model [28], the Marrucci-Greco theory [29] etc. The molecular models are established on sound physical theories, but they are not sensitive to macroscopic properties. Moreover, the molecular models posses high dimensional problems.

The tensor model, also called Landau-de Gennes theory [11], is a phenomenological theory which ignores the detailed nature of the interactions and the molecular structure. The free energy of these models is expressed as a functional of the tensor order parameter Q. This order parameter is preferred as it is a good measurement of macroscopic properties and it covers a wider class of LCs besides simple nematics. A variety of different extensions of the Landau-de Gennes model have been proposed to study the sophisticated LC phases including the cholesterics and the blue phases [5, 22]. In spite of its success, the Landau-de Gennes model might involve nonphysical solutions. For this, Ball and Majumdar [3] suggested that a modification to the entropy terms should be made to yield physically meaningful solutions. Another problem with the tensor theory is that it involves many phenomenological coefficients which are difficult to decide using experimental results.

The vector models, initiated by Oseen-Frank [35] and extended by Ericksen [14, 15], are

based on continuum theory which disregards the details of the structure on the molecular scale. It describes a weakly distorted system in which, at any point, the changes in density of the liquid induced by a long-range distortion are very small and the local optical properties are still those of a uniaxial crystal. In terms of a vector field, such distorted state may be described entirely. The distortion energy of the vector model can be interpreted into three parts indicating three typical deformations: pure splay, pure twist and pure bend. The elastic constants for these three parts, denoted by K_1, K_2, K_3, play an important role in LC modeling. There are plenty of experimental methods, for instance the Frederiks method and the transition method, designed to measure these three constants for typical LC molecules under certain circumstances [12, 32, 36]. And theoretical and numerical investigations of K_1, K_2, K_3 are also abundant [1, 25, 37]. However, the interpretations in terms of basic physical measurements for these elastic constants remain unclear.

Despite the extensive literature on the static LC modeling, little work has been done to analyze the relations between different theories, especially between the macroscopic theories and the microscopic theories. The above mentioned shortcomings and unsolved problems in these theories also motivate us to build a unified framework to connect these models. In this framework, a simple and comprehensive macroscopic model should be a simplification of the corresponding microscopic model applying the same molecular interaction potential. Viewed in this light, the problem of determining macro coefficients is essentially a problem of representing these by the original physical measurements, and it is no longer difficult to decide the number of independent coefficients in the model. During reducing the complicated model into its simplifications, information might be ignored or added, which is responsible for the occurrence of nonphysical solutions.

Following this spirit, we propose a systematic way of LC modeling to build connection among the three kinds of models: Onsager's molecular theory, Landau-de Gennes Q-tensor theory and Oseen-Frank theory. Starting with Onsager's work, we generalize it to the inhomogeneous system to characterize the distortion of orientation by choosing suitable interaction potential in integral form. By applying local Taylor expansion, we can write the energy in differential form, which is similar to Marrucci-Greco's work [29]. Next, by using the Bingham closure and truncating at the low order moment, a Q-tensor model is obtained. In this Q-tensor model, the physical constraint on Q is automatically satisfied. In addition, the coefficients are determined by the molecular model, and their meaning can be apparently interpreted.

Another important advantage of the new Q-tensor model is that the well-known Oseen-Frank model can be recovered by restricting the density to be a constant and Q to be uniaxial. We can also calculate the values of the elastic coefficients in Oseen-Frank energy, and examine the relation among them. Compared with former calculations of K_1, K_2, K_3, our expressions are more complete and precise.

Moreover, a model to characterize the simple smectic LC can also be constructed by our method when introducing higher kernel function moment. The form of whole free energy in Q-tensor model is similar to that for nematic modeling and the layer thickness d need not a priori in our model. Numerical experiments show that the optimal solutions are quite physical.

This paper consists of two primary components of LC investigations. First is the modeling where new nematic and smectic tensor models respecting the physical mechanism are derived from the molecular statistical theories. Further, these two models are consistent with each

other. Second is the study on the relationships among the existing three-level LC theories which leads to a systematic way to compatibly model different phases for different shaped LC molecules.

This paper is organized as follows. In section 2, we illustrate generally how to derive macroscopic model, such as Q-tensor model and vector model from the famous Onsager theory. We will apply this procedure for LC with shape of rigid rod to model nematic phase, in section 3. A new Q-tensor theory is derived, and the celebrated Oseen-Frank model is recovered there. In section 4, we use the same way, but truncate at higher order of derivatives, to model the smectic phase. Numerical results ensure that the smectic-A phase is captured. We give several concluding remarks in section 5. Some detailed calculations involved in the paper are provided in the appendix.

2 A systematic way of static modeling of liquid crystals

In this paper, we focus on the static modeling of liquid crystals. As we would not like to take the boundary effect into account, we let $\Omega \subseteq \mathbb{R}^3$ be a periodic box. In addition, we just consider molecules with axial symmetry. Therefore the spacial information of one molecule can be specified by a position and a direction. Use $\mathbf{x} \in \Omega$ to denote the material point and $f(\mathbf{x}, \mathbf{m})$ to represent the number density for the number of molecules whose orientation is parallel to $\mathbf{m}$ at point $\mathbf{x}$. We start from Onsager's theory:

$$F[f] = k_B T \int_\Omega \int_{\mathbb{S}^2} f(\mathbf{x}, \mathbf{m})(\ln f(\mathbf{x}, \mathbf{m}) - 1) + \frac{1}{2k_B T} \bar{U}(\mathbf{x}, \mathbf{m}) f(\mathbf{x}, \mathbf{m}) \mathrm{d}\mathbf{m}\mathrm{d}\mathbf{x}, \tag{2.1}$$

where k_B is the Boltzmann constant, T is the absolute temperature, and the mean-field interaction potential $\bar{U}$ is defined by

$$\bar{U}(\mathbf{x}, \mathbf{m}) = k_B T \int_\Omega \int_{\mathbb{S}^2} G(\mathbf{x}, \mathbf{m}; \mathbf{x}', \mathbf{m}') f(\mathbf{x}', \mathbf{m}') \mathrm{d}\mathbf{m}' \mathrm{d}\mathbf{x}'.$$

Here $G(\mathbf{x}, \mathbf{m}; \mathbf{x}', \mathbf{m}')$ is the interaction kernel between two molecules in the configurations $(\mathbf{x}, \mathbf{m})$ and $(\mathbf{x}', \mathbf{m}')$. In general, G is translation invariant and hence it can be written in the form

$$G(\mathbf{x}, \mathbf{m}; \mathbf{x}', \mathbf{m}') = G(\mathbf{r}; \mathbf{m}, \mathbf{m}'),$$

where $\mathbf{r} = \mathbf{x}' - \mathbf{x}$. The first part in (2.1) represents the entropy, while the second part describes the interaction energy between each pair of two molecules in the system.

Firstly, we give the following two assumptions:

H1. The LC state is very close to the equilibrium. Hence, we expect that the single particle distribution function is a satisfactory but approximate basis to describe the macroscopic properties of the motion.

H2. The LC is composed of neutral particles surrounded by force fields of short range compared with the average distance separating the particles, that is, the LC is quite diluted.

H1 is the static modeling hypothesis. While, H2 is the critical hypothesis which enables us to take the second virial expansion into account. In the case when $c(\mathbf{x}) = \int_{\mathbb{S}^2} f(\mathbf{x}, \mathbf{m}) \mathrm{d}\mathbf{m}$ is small, the second virial expansion is valid and the corresponding free energy approximation can be expressed in the form

$$\begin{aligned} F[f] = F_0 + k_B T \int f(\mathbf{x}, \mathbf{m}) \ln f(\mathbf{x}, \mathbf{m}) \, \mathrm{d}\mathbf{m}\mathrm{d}\mathbf{x} \\ + \frac{1}{2} \int f(\mathbf{x}, \mathbf{m}) G(\mathbf{x}, \mathbf{m}, \mathbf{x}', \mathbf{m}') f(\mathbf{x}', \mathbf{m}') \, \mathrm{d}\mathbf{m}'\mathrm{d}\mathbf{x}'\mathrm{d}\mathbf{m}\mathrm{d}\mathbf{x}. \end{aligned}$$

Here the pairwise kernel function is defined as the classical expression for the second virial coefficient:

$$G(\mathbf{r}, \mathbf{m}, \mathbf{m}') = 1 - \exp(-U(\mathbf{r}, \mathbf{m}, \mathbf{m}')/k_B T). \tag{2.2}$$

Here U is an intermolecular potential. We assume U consists of the average of interaction of every pairs of basic particles. Hence U is determined by the shape of molecules and the interaction potential V between two basic particles, which can be taken as hard-core potential, Lennard-Jones potential or other forms. Once V is decided, one can then use the Monte-Carlo algorithm to numerically compute the molecular model. As the computational cost for molecular model is too high, we must look into the properties and the leading order moments of the kernel function.

It should be pointed out that for the higher density case, the second virial approximation would not be sufficient. In such case it might be better to refer to the Carnahan-Starling theory [9] or other high density correction theory. However, this is beyond the scope of this paper and here we just use (2.2) as our kernel function.

In the first paper [43] of this series , the relationship between the symmetry of molecule and the properties of the kernel function G has been discussed. However, it is still difficult to derive the explicit expression of G. For this reason, we turn to look into its moments by employing its symmetric property. Since a non-local mean-field molecular interaction potential is employed in our model, the orientational distribution function $f(\mathbf{x}', \mathbf{m}')$ should be approximated by its finite-order Taylor expansion series with respect to $\mathbf{x}'$ at $\mathbf{x}$:

$$\begin{aligned} f(\mathbf{x}', \mathbf{m}') &= f(\mathbf{x} + \mathbf{r}, \mathbf{m}') \\ &= f(\mathbf{x}, \mathbf{m}') + \nabla f(\mathbf{x}, \mathbf{m}') \cdot \mathbf{r} + \frac{1}{2} \nabla^2 f(\mathbf{x}, \mathbf{m}') : \mathbf{r}^T \mathbf{r} + \cdots . \end{aligned} \tag{2.3}$$

Then $\bar{U}(\mathbf{x}, \mathbf{m})$ can be formally written as

$$\begin{aligned} \bar{U}(\mathbf{x}, \mathbf{m}) = & k_B T \int_{\mathbb{S}^2} \int_{\Omega} G(\mathbf{r}; \mathbf{m}, \mathbf{m}') \Big\{ f(\mathbf{x}, \mathbf{m}') + \nabla f(\mathbf{x}, \mathbf{m}') \cdot \mathbf{r} \\ & + \frac{1}{2} \nabla^2 f(\mathbf{x}, \mathbf{m}') : \mathbf{r}^T \mathbf{r} + \cdots \Big\} \mathrm{d}\mathbf{r}\mathrm{d}\mathbf{m}'. \end{aligned}$$

For given kernel form of $G(\mathbf{r};\mathbf{m}',\mathbf{m})$, we calculate the moments:

$$
\begin{aligned}
M^{(0)}(\mathbf{m}',\mathbf{m}) &= \int G(\mathbf{r},\mathbf{m}',\mathbf{m})\mathrm{d}\mathbf{r},\\
M^{(1)}(\mathbf{m}',\mathbf{m}) &= \int G(\mathbf{r},\mathbf{m}',\mathbf{m})\mathbf{r}\mathrm{d}\mathbf{r},\\
M^{(2)}(\mathbf{m}',\mathbf{m}) &= \int G(\mathbf{r},\mathbf{m}',\mathbf{m})\mathbf{r}\mathbf{r}^T\mathrm{d}\mathbf{r},\\
&\cdots.
\end{aligned}
$$

Then we get

$$
\begin{aligned}
\bar{U}(\mathbf{x},\mathbf{m}) =& k_BT\int_{\mathbb{S}^2}\Big\{f(\mathbf{x},\mathbf{m}')M^{(0)}(\mathbf{m},\mathbf{m}')+M^{(1)}(\mathbf{m}',\mathbf{m})\cdot\nabla f(\mathbf{x},\mathbf{m}')\\
&+\frac{1}{2}M^{(2)}(\mathbf{m}',\mathbf{m}):\nabla^2 f(\mathbf{x},\mathbf{m}')+\cdots\Big\}\mathrm{d}\mathbf{m}'.
\end{aligned}
$$

The energy $F[f]$ becomes

$$
\begin{aligned}
F[f] =& k_BT\int_\Omega\int_{\mathbb{S}^2}\Big\{f(\mathbf{x},\mathbf{m})(\ln f(\mathbf{x},\mathbf{m})-1)+\frac{1}{2}\int_{\mathbb{S}^2}M^{(0)}(\mathbf{m},\mathbf{m}')f(\mathbf{x},\mathbf{m}')f(\mathbf{x},\mathbf{m})\mathrm{d}\mathbf{m}'\Big\}\mathrm{d}\mathbf{m}\mathrm{d}\mathbf{x}\\
&+\frac{k_BT}{2}\int_\Omega\int_{\mathbb{S}^2}\int_{\mathbb{S}^2}f(\mathbf{x},\mathbf{m})M^{(1)}(\mathbf{m},\mathbf{m}')\cdot\nabla f(\mathbf{x},\mathbf{m}')\mathrm{d}\mathbf{m}'\mathrm{d}\mathbf{m}\mathrm{d}\mathbf{x}\\
&+\frac{k_BT}{4}\int_\Omega\int_{\mathbb{S}^2}\int_{\mathbb{S}^2}f(\mathbf{x},\mathbf{m})M^{(2)}(\mathbf{m},\mathbf{m}'):\nabla^2 f(\mathbf{x},\mathbf{m}')\mathrm{d}\mathbf{m}'\mathrm{d}\mathbf{m}\mathrm{d}\mathbf{x}+\cdots. \qquad (2.4)
\end{aligned}
$$

The first line is independent of space variation of the probability distribution function f. We call it *bulk energy*, and denote by F_{bulk}. The remainders, which depend on space variation of f, is called *elastic energy*, and denoted by F_{elastic}.

Now, we are going to express the energy by the spherical moments of f, namely,

$$
\int_{\mathbb{S}^2}\underbrace{\mathbf{m}\otimes\mathbf{m}\otimes\cdots\otimes\mathbf{m}}_{k\text{ times}}f(\mathbf{x},\mathbf{m})\mathrm{d}\mathbf{m}. \qquad (2.5)
$$

However, it is better to use the k-th order symmetric *traceless* tensor

$$
Q_k[f]\triangleq\int_{\mathbb{S}^2}\Xi_k(\mathbf{m})f(\mathbf{m})\mathrm{d}\mathbf{m}, \qquad (2.6)
$$

where $\Xi_k(\mathbf{m})$ is the k-th order symmetric *traceless* tensor defined on the unit sphere, whose expression for lower order takes the following form

$$
\begin{aligned}
&\Xi_1(\mathbf{m})=\mathbf{m};\\
&\Xi_2(\mathbf{m})=\mathbf{m}\otimes\mathbf{m}-\frac{1}{3}\mathbf{I};\\
&\Xi_3(\mathbf{m})_{\alpha\beta\gamma}=m_\alpha m_\beta m_\gamma-\frac{1}{5}\Big(m_\alpha\delta_{\beta\gamma}+m_\beta\delta_{\alpha\gamma}+m_\gamma\delta_{\alpha\beta}\Big);\\
&\Xi_4(\mathbf{m})_{\alpha\beta\gamma\mu}=m_\alpha m_\beta m_\gamma m_\mu-\frac{1}{7}\Big(m_\alpha m_\beta\delta_{\gamma\mu}+m_\gamma m_\mu\delta_{\alpha\beta}+m_\alpha m_\gamma\delta_{\beta\mu}+m_\beta m_\mu\delta_{\alpha\gamma}\\
&\qquad+m_\alpha m_\mu\delta_{\beta\gamma}+m_\beta m_\gamma\delta_{\alpha\mu}\Big)+\frac{1}{35}\Big(\delta_{\alpha\beta}\delta_{\gamma\mu}+\delta_{\alpha\gamma}\delta_{\beta\mu}+\delta_{\alpha\mu}\delta_{\beta\gamma}\Big).
\end{aligned}
$$

One can see Appendix for precise definition for general k. All components of $\Xi_k(\mathbf{m})$ are functions of linear combination of the k-th order spherical harmonics. Moreover, for axial symmetric function $f(\mathbf{m}) = f(\mathbf{m}\cdot\mathbf{n})$, we have that

$$Q_k[f] = S_k[f]\Xi_k(\mathbf{n}), \text{ where } S_k[f] = \int_{\mathbb{S}^2} P_k(\mathbf{m}\cdot\mathbf{n})f(\mathbf{m})\mathrm{d}\mathbf{m}, \tag{2.7}$$

and $P_k(x)$ is the k-th Legendre's polynomial.

To derive tensor models from corresponding molecular models, we need to use $Q_k(x)$ to express the total energy. Since it is unrealistic to recover f by finite number of moments, we need to make closure approximation. It is very important to choose a proper closure. To date, variety of closure methods have been proposed. For instance, we have the quadric closure (Doi closure), two Hinch-Leal closures and the Bingham closure, etc. [10, 7, 8, 17, 21, 23]. Here the Bingham closure is strongly suggested for nematic phase and smectic phase, for the reason that Bingham closure guarantees the existence of minimizers of the free energy functional and provides with more accurate solutions. Additionally, it has the good property of ensuring energy dissipation in kinetic models. For given f satisfying

$$\int_{\mathbb{S}^2} f(\mathbf{x},\mathbf{m})\mathrm{d}\mathbf{m} = c(\mathbf{x}), \quad \int_{\mathbb{S}^2} (\mathbf{mm} - \frac{1}{3}\mathbf{I})f(\mathbf{x},\mathbf{m})\mathrm{d}\mathbf{m} = c(\mathbf{x})Q(\mathbf{x}), \tag{2.8}$$

the Bingham closure is to use

$$f_Q(\mathbf{x},\mathbf{m}) = c(\mathbf{x})\frac{\exp(B_Q(\mathbf{x}):\mathbf{mm})}{\int_{\mathbb{S}^2}\exp(B_Q(\mathbf{x}):\mathbf{mm})\mathrm{d}\mathbf{m}} \tag{2.9}$$

to replace f, where B_Q is a symmetric traceless matrix satisfying

$$\int_{\mathbb{S}^2} (\mathbf{mm} - \frac{1}{3}\mathbf{I})\frac{\exp(B_Q:\mathbf{mm})}{\int_{\mathbb{S}^2}\exp(B_Q:\mathbf{mm})\mathrm{d}\mathbf{m}}\mathrm{d}\mathbf{m} = Q. \tag{2.10}$$

It can be proved that B_Q can be uniquely determined for given symmetric traceless Q, if all the eigenvalues of Q belong to $(-\frac{1}{3}, \frac{2}{3})$. The bulk energy is then approximated by

$$\begin{aligned} F_{\text{bulk}} =& k_B T \int_\Omega \int_{\mathbb{S}^2} \Big\{ f_{Q_2}(\mathbf{x},\mathbf{m})(\ln f_{Q_2}(\mathbf{x},\mathbf{m}) - 1) \\ &+ \frac{1}{2}\int_{\mathbb{S}^2} M^{(0)}(\mathbf{m},\mathbf{m}')f_{Q_2}(\mathbf{x},\mathbf{m}')f_{Q_2}(\mathbf{x},\mathbf{m})\mathrm{d}\mathbf{m}'\Big\}\mathrm{d}\mathbf{m}\mathrm{d}\mathbf{x}. \end{aligned} \tag{2.11}$$

Note that the above energy can be viewed as a functional of $c(\mathbf{x})$ and $Q_2(\mathbf{x})$.

Next, we consider the part of elastic energy. To derive a convenient macroscopic model, we should only take finite terms in (2.3) (or (2.4)) into account. If we want to model the nematic phase, it is natural to neglect the terms whose order of derivatives are greater than two. If one would like to consider the smectic phase, it seems enough to keep only the terms whose order of derivatives are not greater than four.

Generally, we can truncate at $2m$-th order of derivatives. Now it is needed to express the following terms in the energy using the tensors Q_k:

$$\int_{\mathbb{S}^2}\int_{\mathbb{S}^2} f(\mathbf{x},\mathbf{m})M^{(l)}(\mathbf{m},\mathbf{m}')f(\mathbf{x},\mathbf{m}')\mathrm{d}\mathbf{m}'\mathrm{d}\mathbf{m}', \text{ for } 1 \le l \le 2m. \tag{2.12}$$

For this, we have to separate the variables of $\mathbf{m}$ and $\mathbf{m}'$ in $M^{(l)}(\mathbf{m}, \mathbf{m}')$. Generally speaking, it can not be done precisely. The reason is that $M^{(l)}(\mathbf{m}, \mathbf{m}')$ contains some terms like $|\mathbf{m} \times \mathbf{m}'|$. Therefore, to deal with them, we treat them as functions of $x = \mathbf{m} \cdot \mathbf{m}'$, and use polynomial expansion, such as Taylor expansion or Legendre polynomial expansion, to approximate them. In this way, we can express the energy by the tensors Q_k. Also, the Bingham closure is used to represent all Q_k by Q_2:

$$Q_k[f] = Q_k[f_{Q_2}], \tag{2.13}$$

where f_{Q_2} is determined by (2.9). Together with the bulk energy part, we obtain a total energy in Q-tensor form. Relevant introductions of the Q-tensor can be found in [30].

To derive the vector model, we only have to set Q_2 uniaxial:

$$Q_2 = S_2(\mathbf{nn} - \frac{1}{3}\mathbf{I}). \tag{2.14}$$

Then an energy in the form of $\mathbf{n}$ could be derived. If we regard the density $c(\mathbf{x})$ and the order parameter S_2 as constants, then we can recover the well-known Oseen-Frank energy. The three important coefficients can be directly expressed by the molecular parameters.

2.1 Summary of the three-scale Schema for LC modeling

In the above derivation, the key interrelationships among the molecular models, the tensor models and the vector models can be tied up into a three-scaled schema. We give some remarks in summary.

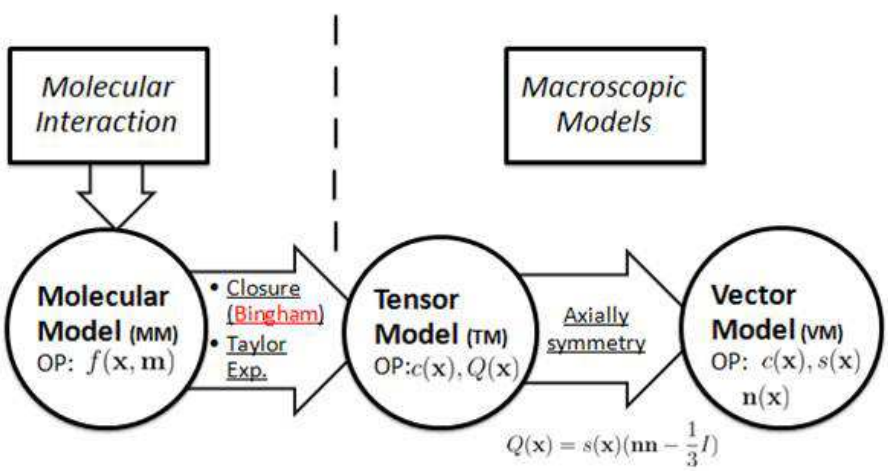

Figure 1: Three-scaled schema in static LC modeling.

Firstly, a pairwise kernel function, which describes the intermolecular potential and depends on concentration, temperature, molecular orientation and external field factors, is the core element of a molecular model. The potential can generally be classified into two categories: the lyotropic potential (such as the hard-core potential) and the thermotropic potential (such as the Lennard-Jones potential). When the intermolecular potential is properly defined, the free energy functional of the molecular model can be obtained immediately.

The minimizers of the free energy functional are used to describe the equilibrium state of the system.

Secondly, a molecular model can be changed into a tensor model through Taylor expansion and closure approximation. The Taylor expansion is used to collect moment information for the elastic energy part. And the closure approximation will help to close the equations as it will convert the total free energy to a functional of the Q-tensor order parameter.

Finally, a tensor model can be easily changed into a vector model if Q-tensor order parameter is restricted to uniaxial cases. So far, we have elaborated the interrelationships of a three-scaled schema, which can be further illustrated by Figure. 1.

The whole procedure can also be applied to molecules with complex shapes. At that time, the selection of order parameters would be a basic and interesting problem. The first paper [43] of this series discussed the relation between order parameters and the molecular symmetry.

Furthermore, this three-scaled schema can also be employed in dynamic modeling of LC system. One slight difference is that we need to additionally guarantee the energy dissipation in characterizing dynamic fluids, which might result in some difficulties in making closure approximation. It can be proved that the Bingham closure [2] satisfies the energy dissipation law while the Doi closure [10] does not. Another difference is that we can not derive the dynamical vector theory (usually named Ericksen-Leslie theory) by simply setting Q uniaxial. Instead, it is needed to perform local expansion near the local equilibrium as in the derivation from the Doi-Onsager theory to Ericksen-Leslie theory done in [24, 16, 41]. The third paper [42] in this series discussed how to employ this framework to dynamical modeling for LC system.

3 Modeling for nematic liquid crystals for rod-like molecule

In this part, we will perform the above procedure to a particular shape but widely studied molecule: the rod-like molecule. The molecule is modeled as a round stick with two caps, see Fig. 2.

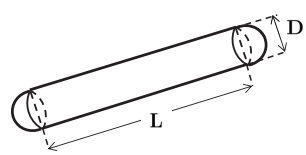

Figure 2: The geometry of the rod-like molecule

This kind of molecule could be seen as a combination of spheres with same diameter D alone a line with length L. Now we can write (2.2) in the form

$$G(\mathbf{r}, \mathbf{m}, \mathbf{m}') = 1 - \exp(-\frac{1}{k_B T L^2} \int_{-L/2}^{L/2} \int_{-L/2}^{L/2} V(|\mathbf{r} + t\mathbf{m} - t'\mathbf{m}'|)\, \mathrm{d}t\mathrm{d}t'). \tag{3.1}$$

To specify the kernel function as the second virial coefficient, we have to decide potential $V(|\mathbf{r}|)$ at first. The simplest choice is the hard-core potential (or in the other name, the

excluded- volume potential), which was used in the Onsager theory. This potential assumes molecules to possess hard elongated cores, which leads to the definition:

$$V = \begin{cases} +\infty, & \text{if the two rods intersects;} \\ 0, & \text{otherwise.} \end{cases}$$

Apparently, the hard-core potential is a pure repulsive potential. Another choice is the Lennard-Jones potential:

$$V^{(LJ)}(r) = 4\frac{\varepsilon}{k_B T}\{(\frac{\sigma}{r})^{12} - (\frac{\sigma}{r})^6\}$$

which takes the attractive interaction into consideration.

Notice that the hard-core potential is independent of temperature T while the Lennard-Jones potential possesses innegligible temperature dependence. Because of this, the hard-core potential might be a proper choice for modeling lyotropic LC while the Lennard-Jones fits better for the thermotropic LC. As a matter of fact, the actual temperature for the nematic phase is often rather high, so both potentials give qualitatively similar results in the nematic phase modeling.

For convenience, here we use the hard-core potential to demonstrate our further results. Such a steric repulsion gives rise to steric cut-off effects. The kernel function G takes the form:

$$G(\mathbf{x}, \mathbf{m}; \mathbf{x}', \mathbf{m}') = \begin{cases} 1, & \text{if the two rods intersects;} \\ 0, & \text{otherwise.} \end{cases} \tag{3.2}$$

It is needed to calculate $M^{(0)}(\mathbf{m}', \mathbf{m})$, $M^{(1)}(\mathbf{m}', \mathbf{m})$, $M^{(2)}(\mathbf{m}', \mathbf{m})$, et. al. Of course, one can also consider the Lennard-Jones potential. But it would lead to more complicate calculations.

Consider two rods with spherical ends pointing $\mathbf{m}$ and $\mathbf{m}'$ respectively, the entire excluded volume will be made up by three parts:

- region A (body-body): a $2D$-high parallelepiped whose section is a rhombus with side-length L and angle γ;
- region B (body-end): four semi-columns with side-length L and radius D;
- region C (end-end): four radius D sphere at the corner.

In the sequel, we introduce a dimensionless parameter $\eta(\leq 1)$ as

$$\eta = \frac{D}{L}. \tag{3.3}$$

3.1 The bulk energy in Q-tensor form

Calculating the volume in each of the above region, we can obtain the zero-th moment of the kernel function (see Appendix for detailed calculation):

$$\int G(\mathbf{r}, \mathbf{m}, \mathbf{m}')\mathrm{d}\mathbf{r} = 2L^3\big(\eta \sin\gamma + \pi\eta^2 + \frac{2}{3}\pi\eta^3\big),$$

where $\sin\gamma = |\mathbf{m} \times \mathbf{m}'|$. Thus, the bulk energy reads:

$$F_{\text{bulk}}[f] = k_B T \int_\Omega \int_{S^2} \left(f \ln f + \int_{S^2} L^3\big(\eta \sin\gamma + \pi\eta^2 + \frac{2}{3}\pi\eta^3\big) f(\mathbf{x}, \mathbf{m}')\mathrm{d}\mathbf{m}' \right) f(\mathbf{x}, \mathbf{m})\mathrm{d}\mathbf{m}\mathrm{d}\mathbf{x}. \tag{3.4}$$

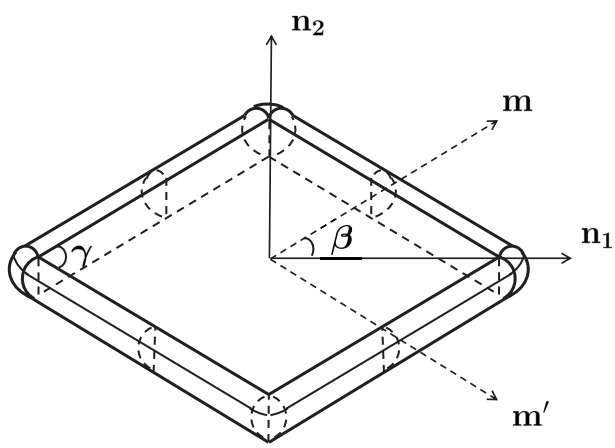

Figure 3: Hard-core potential: excluded-volume

Not surprisingly, this free energy functional is exactly the well-known Onsager [34] model. Actually, Onsager integrated the hard-core potential in a more complicated space field since he treated the LC molecule as strict cylinders.

However, it is difficult to solve the minimizer problem of (3.4). A possible way is to make a projection to the orthogonal polynomial space. In this light, $|\mathbf{m} \times \mathbf{m}'|$ can be replaced by its second order Legendre polynomial approximation $-\frac{15\pi}{64}(\mathbf{mm} - \frac{1}{3}\mathbf{I}) : (\mathbf{m}'\mathbf{m}' - \frac{1}{3}\mathbf{I})$. Hence, the free energy functional becomes:

$$F_{\text{bulk}}[f] = k_B T \int_\Omega \int_{\mathbb{S}^2} f \ln f - \frac{15\pi L^3 \eta}{64} \int_{\mathbb{S}^2} (\mathbf{mm} - \frac{1}{3}\mathbf{I}) : (\mathbf{m}'\mathbf{m}' - \frac{1}{3}\mathbf{I}) f f' \, \mathrm{d}\mathbf{m}' \mathrm{d}\mathbf{m} \mathrm{d}\mathbf{x},$$

which coincides largely with the Maier-Saupe [31, 32] model. Actually, in the original presentation of Maier and Saupe, it was assumed that intermolecular potential is due entirely to van der Waals forces and is temperature-dependent. And it was Doi's [13] work that used a mean-field approximation to produce the above functional and analyze bifurcations which occur as the mean field is varied. In Doi's theory, Q-tensor defined as:

$$Q = \int_{\mathbf{m} \in S^2} (\mathbf{mm} - \frac{1}{3}\mathbf{I}) \rho(\mathbf{x}, \mathbf{m}) \, \mathrm{d}\mathbf{m}$$

is introduced (we always drop the subscript for brevity). Here,

$$f(\mathbf{x}, \mathbf{m}) = c(\mathbf{x}) \rho(\mathbf{x}, \mathbf{m}), \qquad c(\mathbf{x}) = \int_{\mathbb{S}^2} f(\mathbf{x}, \mathbf{m}) \mathrm{d}\mathbf{m}. \tag{3.5}$$

To write the bulk energy in terms of Q, we use the Bingham closure as mentioned before. For symmetric traceless matrix Q whose eigenvalues belong to $(-\frac{1}{3}, -\frac{2}{3})$, let B_Q be the unique symmetric traceless matrix such that

$$\int_{\mathbb{S}^2} (\mathbf{mm} - \frac{1}{3}\mathbf{I}) \frac{\exp(B_Q : \mathbf{mm})}{\int_{\mathbb{S}^2} \exp(B_Q : \mathbf{m}'\mathbf{m}') \mathrm{d}\mathbf{m}'} \mathrm{d}\mathbf{m} = Q. \tag{3.6}$$

Define

$$Z_Q = \int_{\mathbb{S}^2} \exp(B_Q : \mathbf{mm}) \mathrm{d}\mathbf{m}. \tag{3.7}$$

We replace the entropy term $\int_\Omega \int_{\mathbb{S}^2} f \ln f \mathrm{d}\mathbf{m}\mathrm{d}\mathbf{x}$ by

$$\int_\Omega \int_{\mathbb{S}^2} c(\mathbf{x}) \frac{1}{Z_Q} \exp(B_Q : \mathbf{mm}) \ln \Big(c(\mathbf{x}) \frac{1}{Z_Q} \exp(B_Q : \mathbf{mm}) \Big) \mathrm{d}\mathbf{m}\mathrm{d}\mathbf{x},$$

or equivalently,

$$\int_\Omega (c \ln c + cQ : B_Q - c \ln Z_Q) \mathrm{d}\mathbf{x}.$$

Therefore, the energy can be simplified as follows:

$$F_{\text{bulk}} = k_B T \int_\Omega c(\mathbf{x}) \Big(\ln c(\mathbf{x}) + Q(\mathbf{x}) : B_Q(\mathbf{x}) - \ln Z_Q(\mathbf{x}) - \frac{15\pi L^3 \eta}{64} c(\mathbf{x}) |Q(\mathbf{x})|^2 \Big) \mathrm{d}\mathbf{x}. \tag{3.8}$$

The Maier-Saupe theory that we refer to here is temperature-independent. We can also derive the Maier-Saupe theory from the Lennard-Jones potential. The procedure is quite the same that if the kernel function is based on the Lennard Jones potential, in the sense of leading order, we have:

$$\int G(\mathbf{m}, \mathbf{m}', \mathbf{r}) \, \mathrm{d}\mathbf{r} \approx H(L, D, T, \cos\gamma),$$

here T is the temperature. Expanding $H(L, D, T, \cos\gamma)$ in orthogonal polynomials with respect to the last variable, we can obtain Maier-Saupe potential:

$$\int G(\mathbf{m}, \mathbf{m}', \mathbf{r}) \, \mathrm{d}\mathbf{r} \approx H_1(L, D, T) - H_2(L, D, T) P_2(\cos\gamma).$$

3.2 The elastic energy in Q-tensor form

Now we turn to the elastic energy. Since $G(\mathbf{r}; \mathbf{m}', \mathbf{m}) = G(-\mathbf{r}; \mathbf{m}', \mathbf{m})$, we have

$$M^{(1)}(\mathbf{m}, \mathbf{m}') = 0.$$

To calculate the second moment, we introduce (for $\beta \neq 0$ or $\pi/2$)

$$\mathbf{n}_1 = \frac{1}{2\cos\beta}(\mathbf{m} + \mathbf{m}'), \quad \mathbf{n}_2 = \frac{1}{2\sin\beta}(\mathbf{m} - \mathbf{m}'), \quad \mathbf{n}_3 = \mathbf{n}_1 \times \mathbf{n}_2.$$

Under the coordinate $(\mathbf{n}_1, \mathbf{n}_2, \mathbf{n}_3)$, the second moment must be a diagonal matrix:

$$M^{(2)} := \int G(\mathbf{r}, \mathbf{m}, \mathbf{m}') \mathbf{r}\mathbf{r}^T \, \mathrm{d}\mathbf{r} = \mathrm{diag}(M_1, M_2, M_3).$$

Consequently, in the original coordinate, M can be written as:

$$\begin{aligned}
M^{(2)} =& M_1\mathbf{n}_1\mathbf{n}_1 + M_2\mathbf{n}_2\mathbf{n}_2 + M_3\mathbf{n}_3\mathbf{n}_3 \\
=& M_3\mathbf{I} + \frac{M_1 - M_3}{4\cos^2\beta}(\mathbf{m}+\mathbf{m}')(\mathbf{m}+\mathbf{m}') + \frac{M_2 - M_3}{4\sin^2\beta}(\mathbf{m}-\mathbf{m}')(\mathbf{m}-\mathbf{m}') \\
=& M_3\mathbf{I} + (\frac{M_1}{4\cos^2\beta} + \frac{M_2}{4\sin^2\beta} - \frac{M_3}{\sin^2\gamma})(\mathbf{m}\mathbf{m} + \mathbf{m}'\mathbf{m}') \\
&+ (\frac{M_1}{4\cos^2\beta} - \frac{M_2}{4\sin^2\beta} + \frac{M_3\cos\gamma}{\sin^2\gamma})(\mathbf{m}\mathbf{m}' + \mathbf{m}'\mathbf{m}) \\
=& M_3\mathbf{I} + (\frac{M_1}{4\cos^2\beta} + \frac{M_2}{4\sin^2\beta} - \frac{M_3}{\sin^2\gamma})(\mathbf{m}\mathbf{m} + \mathbf{m}'\mathbf{m}') \\
&+ (\frac{M_1}{4\cos^2\beta\cos\gamma} - \frac{M_2}{4\sin^2\beta\cos\gamma} + \frac{M_3}{\sin^2\gamma})(\mathbf{m}\cdot\mathbf{m}')(\mathbf{m}\mathbf{m}' + \mathbf{m}'\mathbf{m})
\end{aligned}$$

We can write:

$$M^{(2)} = B_1\mathbf{I} + B_2(\mathbf{m}\mathbf{m} + \mathbf{m}'\mathbf{m}') + B_3(\mathbf{m}\mathbf{m}' + \mathbf{m}'\mathbf{m})(\mathbf{m}\cdot\mathbf{n}), \tag{3.9}$$

where B_i are functions of $\gamma = \mathbf{m}\cdot\mathbf{m}'$:

$$\begin{cases} B_1(\mathbf{m}\cdot\mathbf{m}') = M_3, \\ B_2(\mathbf{m}\cdot\mathbf{m}') = \frac{M_1}{4\cos^2\beta} + \frac{M_2}{4\sin^2\beta} - \frac{M_3}{\sin^2\gamma}, \\ B_3(\mathbf{m}\cdot\mathbf{m}') = \frac{M_1}{4\cos^2\beta\cos\gamma} - \frac{M_2}{4\sin^2\beta\cos\gamma} + \frac{M_3}{\sin^2\gamma}. \end{cases}$$

In the case of hard-core potential, it turns out that (see Appendix for details):

$$\begin{cases} B_1(\mathbf{m}\cdot\mathbf{m}') &= L^4D\Big(\frac{2|\mathbf{m}\times\mathbf{m}'|\eta^2}{3} + \frac{\pi\eta^3}{2} + \frac{4\pi\eta^4}{15}\Big), \\ B_2(\mathbf{m}\cdot\mathbf{m}') &= L^4D\Big(\frac{|\mathbf{m}\times\mathbf{m}'|}{6} + \frac{\pi\eta(1+\eta)}{3} + \frac{\pi\eta^3}{4} + \frac{2\eta^2}{3|\mathbf{m}\times\mathbf{m}'|}\Big), \\ B_3(\mathbf{m}\cdot\mathbf{m}') &= L^4D\eta^2\Big(\frac{2\arcsin(\mathbf{m}\cdot\mathbf{m}')}{3(\mathbf{m}\cdot\mathbf{m}')} - \frac{2}{3|\mathbf{m}\times\mathbf{m}'|}\Big). \end{cases}$$

It is worth pointing out here that $B_1(\mathbf{m}\cdot\mathbf{m}')$, $B_2(\mathbf{m}\cdot\mathbf{m}')$, $B_3(\mathbf{m}\cdot\mathbf{m}')$ are all even functions with respect to $\cos\gamma = \mathbf{m}\cdot\mathbf{m}'$.

We want to use $c(\mathbf{x})$ and

$$Q_2(\mathbf{x}) = \int \Xi_2(\mathbf{m})\rho(\mathbf{x},\mathbf{m})\mathrm{d}\mathbf{m}, \quad Q_4(\mathbf{x}) = \int \Xi_4(\mathbf{m})\rho(\mathbf{x},\mathbf{m})\mathrm{d}\mathbf{m},$$

to express the elastic energy (truncated to the second moment of the kernel function):

$$F^{(2)}_{\text{elastic}} = \frac{1}{4}\int_\Omega\int_{\mathbb{S}^2}\int_{\mathbb{S}^2} M^{(2)} : \nabla f(\mathbf{x},\mathbf{m}')\nabla f(\mathbf{x},\mathbf{m})\mathrm{d}\mathbf{m}'\mathrm{d}\mathbf{m}\mathrm{d}\mathbf{x}, \tag{3.10}$$

where $M^{(2)}$ is defined by (3.9).

Let $x = \mathbf{m}'\cdot\mathbf{m}$, then we have the following Legendre polynomial expansion:

$$\begin{aligned}
&|\mathbf{m}\times\mathbf{m}'| = \sqrt{1-x^2} = \frac{\pi}{4} - \frac{5\pi}{32}P_2(x) - \frac{9\pi}{256}P_4(x) + \cdots, \\
&\frac{1}{|\mathbf{m}\times\mathbf{m}'|} = \frac{1}{\sqrt{1-x^2}} = \frac{\pi}{2} + \frac{5\pi}{8}P_2(x) + \cdots, \\
&\frac{\arcsin x}{x} = \frac{\pi\ln 2}{2} + \frac{5\pi}{16}(3 - 4\ln 2)P_2(x) + \cdots.
\end{aligned}$$

Hence, we can get

$$
\begin{aligned}
\frac{1}{L^4D}B_1(\mathbf{m}\cdot\mathbf{m}') &= \Big(\frac{\pi\eta^2}{6}+\frac{\pi\eta^3}{2}+\frac{4\pi\eta^4}{15}\Big)-\frac{2\eta^2}{3}\cdot\frac{5\pi}{32}P_2(\mathbf{m}\cdot\mathbf{m}')-\frac{2\eta^2}{3}\cdot\frac{9\pi}{256}P_4(\mathbf{m}\cdot\mathbf{m}')+\cdots,\\
\frac{1}{L^4D}B_2(\mathbf{m}\cdot\mathbf{m}') &= \frac{1}{6}\big(\frac{\pi}{4}-\frac{5\pi}{32}P_2(\mathbf{m}\cdot\mathbf{m}')+\cdots\big)+\frac{\pi\eta(1+\eta)}{3}+\frac{\pi\eta^3}{4}\\
&\quad+\frac{2\eta^2}{3}\big(\frac{\pi}{2}+\frac{5\pi}{8}P_2(\mathbf{m}\cdot\mathbf{m}')+\cdots\big)\\
&= \frac{\pi}{24}+\frac{\pi\eta(1+2\eta)}{3}+\frac{\pi\eta^3}{4}+(-\frac{5\pi}{3\cdot 64}+\frac{5\pi\eta^2}{12})P_2(\mathbf{m}\cdot\mathbf{m}')+\cdots,\\
\frac{1}{L^4D}B_3(\mathbf{m}\cdot\mathbf{m}') &= \eta^2\Big(\frac{2}{3}\big(\frac{\pi\ln 2}{2}+\frac{5\pi}{16}(3-4\ln 2)P_2(\mathbf{m}\cdot\mathbf{m}')+\dots\big)\\
&\quad-\frac{2}{3}\big(\frac{\pi}{2}+\frac{5\pi}{8}P_2(\mathbf{m}\cdot\mathbf{m}')+\cdots\big)\Big)\\
&= \eta^2\Big((\frac{\pi\ln 2}{3}-\frac{\pi}{3})+(\frac{5\pi}{24}-\frac{5\pi\ln 2}{6})P_2(\mathbf{m}\cdot\mathbf{m}')\Big)+\cdots.
\end{aligned}
$$

Denote

$$
\begin{aligned}
&\alpha_{11}=\frac{\eta^2}{6}+\frac{\eta^3}{2}+\frac{4\eta^4}{15},\quad \alpha_{12}=-\frac{2\eta^2}{3}\cdot\frac{5}{32},\quad \alpha_{13}=-\frac{2\eta^2}{3}\cdot\frac{9}{256},\\
&\alpha_{21}=\frac{1}{24}+\frac{\eta(1+2\eta)}{3}+\frac{\eta^3}{4},\quad \alpha_{22}=-\frac{5}{3\cdot 64}+\frac{5\eta^2}{12},\\
&\alpha_{31}=\eta^2\Big(\frac{\ln 2}{3}-\frac{1}{3}\Big),\quad \alpha_{32}=\eta^2\Big(\frac{5}{24}-\frac{5\ln 2}{6}\Big).
\end{aligned}
\tag{3.11}
$$

It is not hard to show that $P_n(\mathbf{m}\cdot\mathbf{m}')$ can be written as the tensor-inner product of Ξ_n, that is,

$$
P_n(\mathbf{m}\cdot\mathbf{m}')=b_n\Xi_n(\mathbf{m}):\Xi_n(\mathbf{m}'),\quad \forall n\geq 1,
$$

where b_n is the highest order coefficient of $P_n(x)$: $b_1=1$, $b_2=\frac{3}{2}$, $b_3=\frac{5}{2}$, $b_4=\frac{35}{8},\cdots$. Therefore, we can write

$$
\begin{aligned}
\frac{1}{\pi L^4D}B_1(\mathbf{m}\cdot\mathbf{m}') &= \alpha_{11}+\frac{3}{2}\alpha_{12}\Xi_2(\mathbf{m}):\Xi_2(\mathbf{m}')+\frac{35}{8}\Xi_4(\mathbf{m}):\Xi_4(\mathbf{m}')+\cdots,\\
\frac{1}{\pi L^4D}B_2(\mathbf{m}\cdot\mathbf{m}') &= \alpha_{21}+\frac{3}{2}\alpha_{22}\Xi_2(\mathbf{m}):\Xi_2(\mathbf{m}')+\cdots,\\
\frac{1}{\pi L^4D}B_3(\mathbf{m}\cdot\mathbf{m}') &= \alpha_{31}+\frac{3}{2}\alpha_{32}\Xi_2(\mathbf{m}):\Xi_2(\mathbf{m}')+\cdots.
\end{aligned}
$$

Dropping the high order terms in the above expansions, we arrive

$$
\begin{aligned}
F^{(2)}_{\text{elastic}} =&\frac{k_BT}{4}\int_\Omega\int_{\mathbb{S}^2}\int_{\mathbb{S}^2}M^{(2)}_{ij}\partial_i f(\mathbf{x},\mathbf{m})\cdot\partial_j f(\mathbf{x},\mathbf{m}')\,\mathrm{d}\mathbf{m}'\,\mathrm{d}\mathbf{m}\mathrm{d}\mathbf{x}\\
=&\frac{1}{2}\int_\Omega\Big\{J_1|\nabla c|^2+J_2|\nabla(cQ)|^2+J_3|\nabla(cQ_4)|^2+J_4\partial_i(cQ_{ij})\partial_j c\\
&+J_5\Big(\partial_i(cQ_{ik})\partial_j(cQ_{jk})+\partial_i(cQ_{jk})\partial_j(cQ_{ik})\Big)\\
&+J_6\Big(\partial_i(cQ_{4iklm})\partial_j(cQ_{4jklm})+\partial_i(cQ_{4jklm})\partial_j(cQ_{4iklm})\Big)\\
&+J_7\partial_i(cQ_{4ijkl})\partial_j(cQ_{kl})\Big\}\mathrm{d}\mathbf{x}.
\end{aligned}
\tag{3.12}
$$

The elastic coefficients can be written as (see Appendix for details)

$$
\begin{aligned}
&J_1 = -\frac{\pi}{2}L^5\eta k_BT\Big(\alpha_{11}+\frac{2}{3}\alpha_{21}+\frac{2}{9}\alpha_{31}+\frac{4}{45}\alpha_{32}\Big),\\
&J_2 = -\frac{\pi}{2}L^5\eta k_BT\Big(\frac{3}{2}\alpha_{12}+\frac{3}{7}\alpha_{22}+\frac{9}{49}\alpha_{32}\Big), \qquad J_3 = -\frac{35\pi}{16}L^5\eta k_BT\alpha_{13},\\
&J_4 = -\frac{\pi}{2}L^5\eta k_BT\Big(2\alpha_{21}+\frac{4}{3}\alpha_{31}+\frac{2}{5}\alpha_{22}+\frac{8}{15}\alpha_{32}\Big),\\
&J_5 = -\frac{\pi}{2}L^5\eta k_BT\Big(\alpha_{31}+\frac{25}{49}\alpha_{32}+\frac{6}{7}\alpha_{22}\Big),\\
&J_6 = -\frac{3\pi}{4}L^5\eta k_BT\alpha_{32}, \qquad J_7 = -\frac{\pi}{2}L^5\eta k_BT\big(3\alpha_{22}+\frac{18}{7}\alpha_{32}\big).
\end{aligned}
$$

It should be pointed out that since the hard-core molecular potential does not account for the temperature influence and we have made several approximations and truncations in derivation, the expressions of the coefficients J_is may be not accurate. What we want to suggest is the energy form (3.12). Now, we use the Bingham closure again to regard Q_4 as a tensor depending on Q:

$$
Q_4 = \frac{1}{Z_Q}\int_{\mathbb{S}^2}\Xi_4(\mathbf{m})\exp(B_Q:\mathbf{mm})\mathrm{d}\mathbf{m}, \tag{3.13}
$$

where B_Q, Z_Q are defined by (3.6) and (3.7). Then (3.12) is a energy functional of c and Q. Together with the Maier-Saupe bulk energy part

$$
F_{\text{bulk}}[c,Q] = k_BT\int_\Omega c(\mathbf{x})\Big(\ln c(\mathbf{x}) + Q(\mathbf{x}):B_Q(\mathbf{x}) - \ln Z_Q(\mathbf{x}) - \frac{15\pi L^3\eta}{64}c(\mathbf{x})|Q(\mathbf{x})|^2\Big)\mathrm{d}\mathbf{x},
$$

we get the total free energy functional as:

$$
F_{\text{total}}[c(\mathbf{x}),Q(\mathbf{x})] = F_{\text{bulk}}[c(\mathbf{x}),Q(\mathbf{x})] + F_{\text{elastic}}[c(\mathbf{x}),Q(\mathbf{x})]. \tag{3.14}
$$

This is the main model hard-rods in our method. We given some remarks in the following subsection.

3.3 A brief look at our new Q-tensor model

The energy (3.14) meets the physical constraints on the eigenvalues of the Q-tensor order parameter which guarantees the existence of physically meaningful minimizers. All the model coefficients are well interpreted in terms of the basic physical measurements and molecular structures so that one can easily decide quantitatively proper values for them in both numerical and physical experiments. The concentration(or density), is a spatially-dependent variable making great contributions to modeling the LC smectic phase, which we will discuss later in this paper. In our framework, the Q-tensor models for the nematics and the smectics are compatible with each other. They only differ in the truncation process for the fourth-order moments terms.

For investigating the nematic phase only, the concentration variable c could be treated as a constant in the model. In this light, our new Q-tensor model becomes the following form:

$$\begin{aligned}
F_{\text{total}}[Q(\mathbf{x})] =& F_{\text{bulk}}[Q(\mathbf{x})] + F_{\text{elastic}}[Q(\mathbf{x})] \\
=& k_B T \int_\Omega c\Big(\ln c + Q : B_Q - \ln Z_Q - \frac{15\pi L^3 \eta}{64} c|Q|^2 \Big) \mathrm{d}\mathbf{x} \\
&+ \frac{1}{2} c^2 \int_\Omega \Big\{ J_2 |\nabla Q|^2 + J_3 |\nabla Q_4|^2 + J_5 \Big(\partial_i Q_{ik} \partial_j Q_{jk} + \partial_i Q_{jk} \partial_j Q_{ik} \Big) \\
&+ J_6 \Big(\partial_i Q_{4iklm} \partial_j Q_{4jklm} + \partial_i Q_{4jklm} \partial_j Q_{4iklm} \Big) \\
&+ J_7 \partial_i Q_{4ijkl} \partial_j Q_{kl} \Big\} \mathrm{d}\mathbf{x}.
\end{aligned} \tag{3.15}$$

This model is our modified version of the Landau-de Gennes tensor model. Its bulk energy part will restrict the Q-tensor in the minimizers to meet the physical constraints. And it also can be checked that if the values of these measurements are picked in reasonable intervals, the elastic energy will be bounded from below in any closed regions. Another advantage of this new version is that no phenomenological coefficients are involved in modeling. More detailed comparison with the Landau-de Gennes model will be studied at the next subsection.

If the axially-symmetry property is imposed on the minimizers of the total free energy, which gives $Q(\mathbf{x}) = S_2(\mathbf{x})(\mathbf{n}(\mathbf{x})\mathbf{n}(\mathbf{x}) - \frac{1}{3}I)$, the Ericksen vector model where

$$F_{\text{total}} = F_{\text{total}}[S_2(\mathbf{x}), \mathbf{n}(\mathbf{x})]$$

will be derived. Furthermore, if the scalar order parameter S_2 is regarded spatially irrelevant, we finally arrive at the Oseen-Frank model where

$$F_{\text{total}} = F_{\text{total}}[\mathbf{n}(\mathbf{x})]$$

The elastic coefficients K_1, K_2, K_3 can be interpreted then and their relations can be carefully examined.

In addition to our derivation framework, similar analogue tensor models can be derived by following the same procedure when modeling for other molecular structures such as disk-shaped molecules and chiral molecules, or when the molecular interaction potential is redefined to account for the temperature dependence.

It is obvious that after dropping some high order terms in (3.15), we derive the Marrucci-Greco [29] model which first analyzed the long-range elasticity of LCPs. Some other nonhomogeneous extensions of Doi's theory, differing in the intermolecular potential, can also be obtained from our model by making truncations or approximations to our nonlocal elastic potential. For instance, if we only keep the $|\nabla Q_2|^2$ term in elastic energy, we get the Feng, Sgarlari and Leal's [19] one-constant model; and if we slightly modify some terms with Q_4, it turns out to be Yu-Zhang's [45] model which integrated the long-range interactions in a ellipsoidal region. Besideds, the integral form of our molecular model is quite the same as the model of Wang-E-Liu-Zhang [40]. Also, our method still works when the shape of the molecules are changed, which will leads to Wang's [39] work.

3.3.1 Comparisons with the Landau-de Gennes Q-tensor theory

The well-known Landau-de Gennes model is a phenomenological theory, which has successfully described the phase transition for liquid crystals. Assuming that the free energy can be expanded as a power series of the order parameter Q and of its spatial derivatives, de Gennes gave the free energy functional as follows [11]:

$$\begin{aligned} F^{(LG)}[Q] &= \int_\Omega \underbrace{\left(\frac{A(T-T^*)}{2}\mathrm{tr}(Q^2) - \frac{B}{3}\mathrm{tr}(Q^3) + \frac{C}{4}(\mathrm{tr}Q^2)^2\right)}_{F^{(LG)}_{\text{bulk}}} \mathrm{d}\mathbf{x} \\ &\quad + \int_\Omega \underbrace{\left(L_1 Q_{ik,j}Q_{ij,k} + L_2 Q_{ij,j}Q_{ik,k} + L_3|\nabla Q|^2 + L_4 Q_{lk}Q_{ij,k}Q_{ij,l}\right)}_{F^{(LG)}_{\text{elastic}}} \mathrm{d}\mathbf{x}. \end{aligned} \tag{3.16}$$

The above energy contains two parts. The first part $F^{(LG)}_{\text{bulk}}$ governs the bulk effects, A, B, C are constants depending on temperature and material. This expression of bulk energy is widely used as it is capable of describing a second-order phase transition and more importantly, as it respects the axially-symmetry of the stationary points in homogeneous case. The second part $F^{(LG)}_{\text{elastic}}$ is the elastic energy density that penalizes spatial non-homogeneities. There are many works to study the solution of the classic Landau-de Gennes model, for example, one may see [3, 33, 27] and the references therein.

An important problem in Q-tensor theory is to understand the physical meaning of the tensorial order parameter Q. There is a kind of interpretation that the Q-tensor represents the leading order moment information of the orientational distribution function $f(\mathbf{x}, \mathbf{m})$. Hence, according to the derivation from the mean-field approach, Q-tensor indicates the second moment tensor of f, i.e.

$$Q := \int_{\mathbb{S}^2} (\mathbf{m}\mathbf{m} - \frac{1}{3}\mathbf{I}) f \, \mathrm{d}\mathbf{m}.$$

One can immediately draw a conclusion from the above definition that the molecular theories require Q-tensor to be a symmetric, traceless 3×3 matrix with eigenvalues $\{\lambda_i(Q)\}$ constrained by the following inequalities:

$$-\frac{1}{3} \le \lambda_i(Q) \le \frac{2}{3}, \qquad i = 1, 2, 3.$$

Here, the inequalities were referred as physical constraints of the Q-tensor by Ball and Majumdar [3], who pointed out that: *"the bulk potential in the Landau-de Gennes theory has no term that enforces the physical constraints on the eigenvalues in the Q-tensor"*.

To avoid the non-physical flaws of Landau expansions, the following bulk potential derived from the mean-field Maier-Saupe free energy was suggested in [3]:

$$F^{(BM)}_{\text{bulk}} = k_B T \inf_{f \in \mathcal{A}_Q} \int_{\mathbb{S}^2} f(\mathbf{m}) \ln f(\mathbf{m}) \, \mathrm{d}\mathbf{m} - \kappa |Q|^2, \tag{3.17}$$

where

$$\mathcal{A}_Q = \Big\{ f : S^2 \to \mathbb{R}, f \ge 0, Q = \int_{\mathbb{S}^2} (\mathbf{m}\mathbf{m} - \frac{1}{3}\mathbf{I}) f(\mathbf{m}) \, \mathrm{d}\mathbf{m}, \text{ and } \int_{\mathbb{S}^2} f(\mathbf{m}) \mathrm{d}\mathbf{m} = 1. \Big\}.$$

They also proved the existence and the uniqueness of the solution for the above functional. It can be checked that

$$f_{B_Q} = \frac{\exp(B_Q : \mathbf{mm})}{\int_{\mathbb{S}^2} \exp(B_Q : \mathbf{mm}) \mathrm{d}\mathbf{m}}$$

solves the minimizing problem

$$\inf_{f \in \mathcal{A}_Q} \int_{\mathbb{S}^2} f(\mathbf{m}) \ln f(\mathbf{m}).$$

Therefore, our bulk energy part (3.8) is actually the same as the energy (3.17). As a result, the eigenvalues of the Q-tensor in our tensor model are bounded both from below and above to meet physical constraints due to their analysis in [3].

It is worth pointing out that by representing the Q-tensor as:

$$Q = s(\mathbf{nn} - \frac{1}{3}I) + b(\mathbf{n'n'} - \frac{1}{3}I),$$

the bulk energy density is in fact a function only of two scalars s and b, i.e.

$$F_{\text{bulk}}^{(LG)}[Q] = \psi_{\text{bulk}}(s, b).$$

Indeed, we have that

$$\text{tr}Q^2 = \frac{2}{3}(s^2 + b^2 - sb), \quad \text{tr}Q^3 = \frac{1}{9}(2s^3 + 2b^3 - 3s^2b - 3sb^2).$$

Therefore, $F_{\text{bulk}}^{(LG)}[Q]$ is essentially the polynomials approximation of the bulk energy density F_{bulk} with respect to s and b. Therefore, the Bingham closure can provide us with an approach to decide the material-dependent and temperature-dependent coefficients A, B, C in the Landau expansion of the bulk energy.

In addition, it has also been shown in [3] that, for any boundary conditions, if $L_4 \neq 0$, then the Landau-de Gennes energy $F^{(LG)}[Q]$ is unbounded from below. In other words, $\min_Q F^{(LG)}[Q] = -\infty$. To modify the bulk energy part by (3.17) or (regarding c as a constant)

$$F_{\text{bulk}} = k_B T \Big(B_Q : Q - \ln Z - \kappa |Q|^2 \Big),$$

leads a possible way to resolve this problem. However, it seems impossible to prove the existence of global minimizers when $L_4 \neq 0$ unless suitable hypotheses have been made on the elastic constants L_i. It might be widely accepted that there are indeed some relationships on these elastic constants. However, to the best of our knowledge, these relationships have not been understood clearly yet.

By deriving the tensor model from the molecular scale, our work may offer an approach to settle the above problem. Since our tensor model is derived from physical energy at molecular level, the elastic energy should be bounded from below naturally. On the other hand, when the density is assumed to be constant, the elastic energy $F_{\text{elastic}}^{(2)}$ is a functional of Q. Then by using suitable expansion, we can regard $F_{\text{elastic}}^{(LG)}$ as a certain approximation of $F_{\text{elastic}}(Q, \nabla Q)$, and derive the elastic coefficients $L_i (1 \leq i \leq 4)$ in terms of the molecular parameters. This might give us a possible way to understand those coefficients.

3.4 The elastic coefficients under uniaxial constrain

On the vector scale, we will focus on the famous Oseen-Frank elastic constants K_1, K_2, K_3. Looking into their relations will be a straight and important way to understand the nature of LC system.

3.4.1 Derivation of the elastic coefficients

In racemic or achiral system, the nematics show complete rotational symmetry around their preferred orientation. Some previous investigators were then inspired to restrict the LC model into uniaxial cases, which leads to the vector model.

One of the simplest and the most successful mathematical vector theory is the Oseen-Frank theory [35] that characterizes the equilibrium by a director field $\mathbf{n}(\mathbf{x}) \in \mathbb{S}^2$ with a spatially invariant degree of orientational order. As a consequence of such assumptions, the bulk potential in the Oseen-Frank model is a spatial-independent constant. Therefore, the equilibrium configurations of LC are only relevant to the local or global minimizers of the corresponding elastic energy functional. The Oseen-Frank energy takes the form:

$$\begin{aligned} F_{\text{elastc}}^{(OF)}(\mathbf{n}, \nabla\mathbf{n}) =& \frac{1}{2}K_1(\text{div}\mathbf{n})^2 + \frac{1}{2}K_2(\mathbf{n}\cdot(\nabla\times\mathbf{n}))^2 + \frac{1}{2}K_3|\mathbf{n}\times(\nabla\times\mathbf{n})|^2 \\ &+ \frac{K_2+K_4}{2}(\text{tr}(\nabla\mathbf{n})^2 - (\text{div}\mathbf{n})^2), \end{aligned} \tag{3.18}$$

where $K_i (i = 1, 2, 3, 4)$ are elastic constants, which describe three basic types of distortions: pure splay, pure twist and pure bend respectively. Apparently, the three elastic constants K_1, K_2, K_3 should be non-negative, otherwise the energy will be unbounded from below, and the global minimizer will be nonexistent.

To derive the celebrated Oseen-Frank vector model from tensor model, the following two constraints are required:

- Q-tensor should be restricted to the uniaxial form, i.e. $Q = S_2(\mathbf{nn} - \frac{1}{3}I)$;
- The scalar order parameter S_2 should be spatially invariant.

It is worth pointing out that these two constraints are naturally satisfied in the equilibrium state of the homogeneous LC system.

We consider the case when the density c is constant. Based on our previous analysis, the bulk energy functional can be written as

$$F_{\text{bulk}}[Q] = k_B T c \int_\Omega \Big(B_Q : Q - \ln Z_Q - \frac{5\pi}{64}cL^2 D|Q|^2\Big)\mathrm{d}\mathbf{x},$$

where $Z_Q = \int_{\mathbb{S}^2} \exp(\mathbf{mm} : B_Q)\mathrm{d}\mathbf{m}$. One can easily figure out that the bulk potential of the Oseen-Frank model actually only depends on the constant scalar order parameter S_2, irrelevant of the orientation of molecules $\mathbf{n}$. Particularly for the last term, we have

$$|Q|^2 = \text{tr}(Q^2) = \frac{2}{3}S_2^2.$$

Therefore, F_{bulk} is an additive constant in the free energy functional when S_2 is spatially invariant. Hence the bulk energy part can be omitted in modeling. In other words, we need

only concern about the elastic potential of the system. The equilibrium state can be viewed as the minimizers of the elastic energy functional in Oseen-Frank.

Writing the Q-tensor as $Q = S_2(\mathbf{nn} - \frac{1}{3}I)$ and utilizing the relation that $\partial_j n_i n_i = 0$, the Oseen-Frank elastic constants can be derived as follows (the detail calculation is included in Appendix):

$$\begin{aligned}
K_1 &= \pi c^2 L^5 \eta k_B T\Big(- S_2^2\Big(\eta^2\frac{299}{1568} - \frac{15}{7\cdot 64} - \frac{12\ln 2\eta^2}{49}\Big) + S_4^2\Big(\frac{15\eta^2}{128} - \frac{115\eta^2}{49}\Big(\frac{1}{8} - \frac{\ln 2}{2}\Big)\Big)\\
&\quad + S_2S_4\frac{15}{7}\Big(- \frac{1}{64} + \frac{5\eta^2}{14} - \frac{3}{7}\eta^2\ln 2\Big)\Big),\\
K_2 &= \pi c^2 L^5 \eta k_B T\Big(- 5S_2^2\Big(\eta^2\frac{19}{1568} - \frac{1}{7\cdot 64} - \frac{3\ln 2\eta^2}{98}\Big) + S_4^2\Big(\frac{15\eta^2}{128} - \frac{15}{49}\eta^2\Big(\frac{1}{8} - \frac{\ln 2}{2}\Big)\Big)\\
&\quad + S_2S_4\frac{5}{7}\Big(- \frac{1}{64} + \frac{5\eta^2}{14} - \frac{3}{7}\eta^2\ln 2\Big)\Big),\\
K_3 &= \pi c^2 L^5 \eta k_B T\Big(- S_2^2\Big(\eta^2\frac{299}{1568} - \frac{15}{7\cdot 64} - \frac{12\ln 2\eta^2}{49}\Big) + S_4^2\Big(\frac{15\eta^2}{128} - \frac{150}{49}\eta^2\Big(\frac{1}{8} - \frac{\ln 2}{2}\Big)\Big)\\
&\quad - S_2S_4\frac{20}{7}\Big(- \frac{1}{64} + \frac{5\eta^2}{14} - \frac{3\ln 2\eta^2}{7}\Big)\Big),
\end{aligned}$$

where S_4 is a function of S_2 due to the Bingham closure, in other words, given by

$$S_4 = \int_{\mathbb{S}^2} P_4(\mathbf{m}\cdot\mathbf{n})\frac{\mathrm{e}^{r(\mathbf{m}\cdot\mathbf{n})^2}}{\int_{\mathbb{S}^2}\mathrm{e}^{r(\mathbf{m}'\cdot\mathbf{n})^2}\mathrm{d}\mathbf{m}'}\mathrm{d}\mathbf{m}, \tag{3.19}$$

where $r = r(S_2)$ is the unique real number satisfying

$$S_2 = \int_{\mathbb{S}^2} P_2(\mathbf{m}\cdot\mathbf{n})\frac{\mathrm{e}^{r(\mathbf{m}\cdot\mathbf{n})^2}}{\int_{\mathbb{S}^2}\mathrm{e}^{r(\mathbf{m}'\cdot\mathbf{n})^2}\mathrm{d}\mathbf{m}'}\mathrm{d}\mathbf{m},$$

or equivalently

$$S_2 = \frac{1}{2}\frac{\int_0^1(3z^2-1)\mathrm{e}^{rz^2}\mathrm{d}z}{\int_0^1\mathrm{e}^{rz^2}\mathrm{d}z}. \tag{3.20}$$

Remark 3.1. *It can be proven that $S_2 \in (-\frac{1}{2}, 1)$ is a monotonically increasing function of $r \in (-\infty, +\infty)$. Thus, r can be uniquely determined for all $S_2 \in (-\frac{1}{2}, 1)$.*

Next, based on the above expressions, we will go deep into the comparative relationships among K_1, K_2, K_3, which are closely linked with the stability of the nematic phase.

3.4.2 The comparative relationship among the Oseen-Frank elastic constants

Although we have already expressed K_1, K_2, K_3 in terms of S_2, c, L, D, T, it is still hard to decide their relationships. Notice that there are only two independent variables which are:

$$\alpha = \pi L^2 Dc, \quad \text{and} \quad \eta = D/L.$$

The problem lies in the fact that the scalar order parameter S_2 is in fact related to other parameters. Indeed, the relation between S_2 and α is given by (3.20) and (3.21). We will

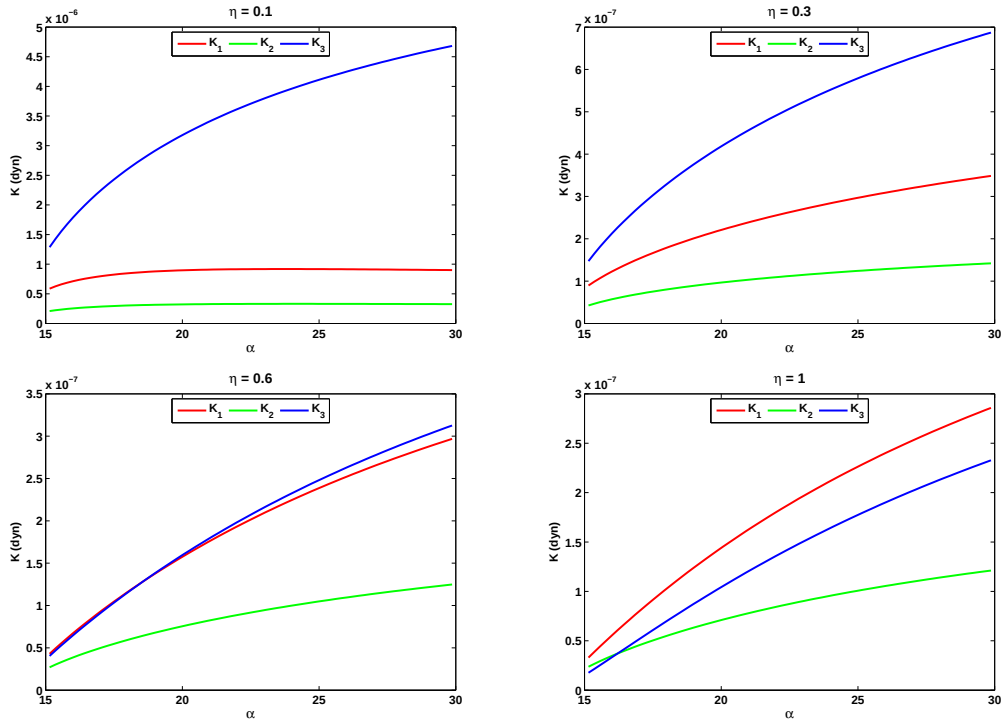

Figure 4: Oseen-Frank elastic constants K_1, K_2, K_3 under hard-core potential

offer a simple explanation to this relation here. The order of coefficients of $F^{(2)}_{\text{elastic}}$ is $O(L^5)$, while the order of F_{bulk} is $O(L^3)$. Hence, S_2 should be chosen to minimize F_{bulk}. By the work of [26] or [18], we know that S_2 should be chosen to satisfy

$$\frac{15\alpha}{32}\int_0^1 (3z^2-1)\mathrm{e}^{rz^2}\mathrm{d}z = 2r\int_0^1 \mathrm{e}^{rz^2}\mathrm{d}z. \tag{3.21}$$

where $r = r(S_2)$.

Once the concentration parameter α and the diameter-to-length ratio η are decided, we can compute K_1, K_2, K_3 for lyotropic LC. If we assume that the LC molecule has a diameter of ~ 5 Å with temperature $T = 400K$ and dimensionless volume fraction $\Phi = c\cdot\frac{1}{4}\pi LD^2 = 0.4$, the elastic constants K_is will have the dimension of energy/cm (or dynes) and the expected magnitude is 10^{-6} dyn. This is indeed the correct order of magnitude according to the famous Frederiks experiment [20] conducted by Prost et. al [36], Saupe [32] and Durand et. al. [12].

Taking the diameter-to-length ratio η as 0.1, 0.3, 0.6 and 1.0 respectively, we draw the value curves of the corresponding Oseen-Frank elastic constants with respect to α in Fig. 4.

As the parameters are not accurate and several approximations have been made in modeling, our elastic constants K_1, K_2, K_3 are close to the physical observation values but not precise. Nevertheless, we can still conclude some points from them:

- K_1, K_2, K_3 are keeping positive in value regardless of α and η, which bounds the distortion energy from below;
- K_1, K_2, K_3 converge in most of the cases as the concentration factor α gets smaller. It

illustrates why we might employ the one-constant Landau-de Gennes model (in which $K_1 = K_2 = K_3$) for diluted LC;

- When the potential density α goes larger, K_3 becomes significantly larger than the other two elastic constants while K_1 and K_2 are almost remaining at the same level. Such phenomenon have already been observed in many physical experiments, for instance, the Frederiks experiment [20];

- For a typically long rod-like LC molecule, it always has the following relation:

$$K_3 \geq K_1 \geq K_2,$$

  no matter how the concentration changes. Furthermore, this relation holds in the limiting case in which the molecular diameter goes to 0. This property is also supported by experimental results.

- When the rod-like LC molecule gets shorter in its shape, elastic constant K_1 will eventually overcome K_3 in the low concentration area. In fact, the diameter-to-length ratio of the rod-like LC molecules are generally observed within the range of $1:4$ to $1:15$. In this light, this situation might indicate that rod-like molecules which are "too short" in its length can not be observed in nematic phase.

In addition to the last point, we guess that when the rod-like LC molecule goes "too long", the nematic phase might also lose its stability to the smectic phase. We think it will lead us to another fascinating story.

3.5 The Ericksen's vector model

While the head-tail symmetry of the LC molecules is respected by both he molecular model and tensor model, the equivalence of orientation $\mathbf{n}$ and $-\mathbf{n}$ was not fully recognized by Oseen. Consequently, this drawback results in its inability to account for the complicated line and surface defects that are physically observed. Particularly in certain circumstances, the Oseen-Frank model will lead to nonphysical solutions, and even fake "defects". Besides, as we can see from the relationship between the order parameter s and the concentration factor α in the homogeneous case, s moves rapidly when there is a slight change of α in the nematic phase area. In other words, while it is suitable to treat α (or c equivalently) as a constant in nematic modeling, it might not be proper to set the scalar order parameter s invariant.

Ericksen [15] extended the Oseen-Frank model by relaxing the assumption of a spatially invariant degree of orientational order s. We can also derive the Ericksen model by imposing uniaxial constraint in our new tensor model. The only difference is that we have to keep terms containing s or gradient of s. Unlike the situation in deriving the Oseen-Frank model, the bulk energy denoted in the Ericksen model is not an additive constant, but a function of s. One can obtain that $F_{\text{bulk}}^{(Eri)}(s)$ can be written as follows:

$$F_{\text{bulk}}^{(Eri)}(s) = k_B T\left(c(B_Q : Q - \ln Z) - \frac{2}{3}c^2 L^2 D s^2\right),$$

where both the value of the inner tensor product $B_Q : Q$ and the value of the normalization constant Z depend only s. It is not difficult to prove that the consistent condition proposed

by Ericksen:

$$\lim_{s\to 0} F_{\text{bulk}}^{(Eri)}(s) = O(s^2)$$

is satisfied here. Besides, we have:

$$F_{\text{bulk}}^{(Eri)}(s) \to \infty, \qquad \text{if} \quad s \to 1_- \quad \text{or} \quad s \to -\frac{1}{2}_+ .$$

The Ericksen elastic energy density truncated to the order of s^2 reads:

$$\begin{aligned} 2F_{\text{elastic}}^{(Eri)} =& K_1 s^2 (\text{div}\mathbf{n})^2 + K_2 s^2 (\mathbf{n}\cdot(\nabla\times\mathbf{n}))^2 + K_3 s^2 |\mathbf{n}\times(\nabla\times\mathbf{n})|^2 \\ &+ (K_2+K_4) s^2 (\text{tr}(\nabla\mathbf{n})^2 - (\text{div}\mathbf{n})^2) \\ &+ l_1 |\nabla s|^2 + l_2 |\nabla s\cdot\mathbf{n}|^2 + l_3 s \nabla s\cdot\mathbf{n}\text{div}\mathbf{n} + l_4 s \nabla s\cdot(\nabla\mathbf{n}\mathbf{n}), \end{aligned} \tag{3.22}$$

where the elastic constants K_1, K_2, K_3 are the same as what we have computed for the Oseen-Frank model. The rest of the coefficients can also be derived from our tensor model as well. We omit their exact expression here for brevity.

4 Modeling for simple smectic liquid crystals

Smectic liquid crystals are characterized by both orientational and translational ordering of anisotropic molecules. In simple smectic phases, namely, smectic-A (S_A) and smectic-C (S_C), the translational ordering is one dimensional, and the director of primary molecular axis is either parallel or tilted with respect to the direction of the wave vector of the corresponding density wave. Characterizing the nematic to smectic-A phase transition has long been a principal problem in the physics of liquid crystals. The main complexity of the Nematic-S_A transition arises from an intrinsic coupling between local number density and order parameter. Despite considerable literature on modeling of smectic phase, there are still unresolved issues due to this complexity. Based on the whole idea described above, here a simple model can be constructed to characterize the nematic and smectic-A phase universally.

4.1 A tensor model for smectic-A phase

The key point in modeling the smectic phase is to build the layer structure. Compared with the nematic modeling, an additional positional order parameter must be introduced to describe the modulation of the concentration. The derivation procedure is almost the same as our nematic modeling except for that the number density parameter c is no longer a spatially invariant constant. Therefore to assure the whole free energy bounded from below, we need to truncate the elastic energy to the fourth moment of the kernel function:

$$M^{(4)} := \int G(\mathbf{r},\mathbf{m},\mathbf{m}')\mathbf{rrrr}\,\mathrm{d}\mathbf{r}.$$

In the case of hard-core potential, the fourth moment under the original coordinate can be written as (see Appendix for details):

$$\begin{aligned} M^{(4)} =& R_1(\mathbf{m},\mathbf{m}')(\delta_{ij}\delta_{kl})_{\text{sym}} + R_2(\mathbf{m},\mathbf{m}')(\delta_{ij}\mathbf{mm} + \delta_{ij}\mathbf{m}'\mathbf{m}')_{\text{sym}} \\ &+ R_3(\mathbf{m},\mathbf{m}')(\delta_{ij}\mathbf{mm}')_{\text{sym}} + R_4(\mathbf{m},\mathbf{m}')(\mathbf{mmmm} + \mathbf{m}'\mathbf{m}'\mathbf{m}'\mathbf{m}') \\ &+ R_5(\mathbf{m},\mathbf{m}')(\mathbf{mmm}'\mathbf{m}')_{\text{sym}} + R_6(\mathbf{m},\mathbf{m}')(\mathbf{mmmm}' + \mathbf{m}'\mathbf{m}'\mathbf{m}'\mathbf{m})_{\text{sym}}, \end{aligned} \tag{4.1}$$

where

$$\begin{cases} R_1(\mathbf{m},\mathbf{m}') = L^6 D\Big(\frac{2\sin\gamma\ \eta^4}{15} + \frac{\pi\eta^5}{12} + \frac{4\pi\eta^6}{105}\Big), \\ R_2(\mathbf{m},\mathbf{m}') = L^6 D\Big(\frac{\sin\gamma\ \eta^2}{18} + \frac{\pi\eta^3}{12} + \frac{\pi\eta^4}{15} + \frac{\pi\eta^5}{24} + \frac{2\eta^4}{15}\frac{1}{\sin\gamma}\Big), \\ R_3(\mathbf{m},\mathbf{m}') = L^6 D\Big(\frac{(\pi-2\gamma)\eta^4}{15} - \frac{2\eta^4}{15}\frac{\cos\gamma}{\sin\gamma}\Big), \\ R_4(\mathbf{m},\mathbf{m}') = L^6 D\Big\{\Big(\frac{\sin\gamma}{40} + \frac{3\pi\eta}{40} + \frac{\pi\eta^2}{12} + \frac{\pi\eta^3}{8} - \frac{\pi\eta^5}{24}\Big) + \frac{\eta^3}{3}\frac{1}{\sin\gamma} - \frac{2\eta^4}{15}\frac{1}{\sin^3\gamma}\Big\}, \\ R_5(\mathbf{m},\mathbf{m}') = L^6 D\Big\{\Big(\frac{\sin\gamma}{72} + \frac{\pi\eta}{24} + \frac{\pi\eta^2}{12} + \frac{\pi\eta^3}{8}\Big) + \Big(\frac{\eta^2}{9} + \frac{2\eta^4}{15}\Big)\frac{1}{\sin\gamma} - \frac{2\eta^4}{15}\frac{\cos^2\gamma}{\sin^3\gamma}\Big\}, \\ R_6(\mathbf{m},\mathbf{m}') = L^6 D\Big\{\frac{(\pi-2\gamma)\eta^2}{12} - \frac{\eta^2}{6}\frac{\cos\gamma}{\sin\gamma} + \frac{2\eta^4}{15}\frac{\cos^3\gamma}{\sin^3\gamma}\Big\}. \end{cases}$$

For simplicity we just expand the fourth moment to $O(\eta)$:

$$M^{(4)} \approx \pi L^6 D\Big[[\mu_{11}(\mathbf{mmmm} + \mathbf{m'm'm'm'}) + (\mu_{21} + \mu_{22}P_2(\mathbf{m}\cdot\mathbf{m}')^2)(\mathbf{mmm'm'})_{\text{sym}}\Big],$$

where

$$\mu_{11} = \frac{1}{160} + \frac{3\eta}{40}, \qquad \mu_{21} = \frac{1}{288} + \frac{\eta}{24}, \qquad \mu_{22} = -\frac{5}{2304.}$$

Thus the fourth order elastic energy reads

$$\begin{aligned} F^{(4)}_{\text{elastic}} &= \int_\Omega \int_{\mathbb{S}^2} \int_{\mathbb{S}^2} \int_\Omega f(\mathbf{x},\mathbf{m}) G(\mathbf{m},\mathbf{m}',\mathbf{r})(r_i\partial_i)^4\big\{f(\mathbf{x},\mathbf{m}')\big\}\ \mathrm{d}\mathbf{r}\mathrm{d}\mathbf{m}'\mathrm{d}\mathbf{m}\mathrm{d}\mathbf{x} \\ &\approx \frac{\pi L^7 \eta k_B T}{24} \int_\Omega \int_{\mathbb{S}^2} \int_{\mathbb{S}^2} \Big\{2\mu_{11}\ f(\mathbf{x},\mathbf{m})\ m_i m_j m_k m_l\ \partial_{ijkl}\big\{f(\mathbf{x},\mathbf{m}')\big\}\mathrm{d}\mathbf{m}'\mathrm{d}\mathbf{m} \\ &\qquad + (\mu_{21} - \frac{1}{2}\mu_{22}) f(\mathbf{x},\mathbf{m})(m_i m_j m'_k m'_l)_{\text{sym}}\ \partial_{ijkl}\big\{f(\mathbf{x},\mathbf{m}')\big\}\mathrm{d}\mathbf{m}'\mathrm{d}\mathbf{m} \\ &\qquad + \frac{3}{2}\mu_{22} f(\mathbf{x},\mathbf{m})(\mathbf{m}\cdot\mathbf{m}')^2 (m_i m_j m'_k m'_l)_{\text{sym}}\ \partial_{ijkl}\big\{f(\mathbf{x},\mathbf{m}')\big\}\mathrm{d}\mathbf{m}'\mathrm{d}\mathbf{m}\Big\}\mathrm{d}\mathbf{x}. \end{aligned}$$

$F^{(4)}_{\text{elastic}}$ can be similarily written in the Q-tensor form (see Appendix for details). Since we introduce Q_4 in $F^{(4)}_{\text{elastic}}$, we also truncate the approximation of $|\mathbf{m}\times\mathbf{m}'|$ at the fourth order Legendre polynomial. Now the total free energy functional is readily given as

$$F_{\text{total}} = F_{\text{bulk}} + F^{(2)}_{\text{elastic}} + F^{(4)}_{\text{elastic}}.$$

After proper substitution $\mathbf{x} = \mathbf{x}/L$, we finally reach a dimensionless Q-tensor model with the

free energy functional as follows:

$$
\begin{aligned}
&F[c(\mathbf{x}), Q_2(\mathbf{x})] \\
=&\int_\Omega c(\ln c + B_Q : Q_2 - \ln Z)\mathrm{d}\mathbf{x} + \frac{\alpha}{2}\int_\Omega \{E_{11}c^2 + E_{12}|cQ_2|^2 + E_{13}|cQ_4|^2 \\
&+ E_{21}|\nabla c|^2 + E_{22}|\nabla(cQ_2)|^2 + E_{23}|\nabla(cQ_4)|^2 + E_{24}\ \partial_i(cQ_{2ij})\partial_j(c) \\
&+ E_{25}\ \partial_i(cQ_{ik})\partial_j(cQ_{jk}) + E_{26}\ \partial_i(cQ_{4ijkl})\partial_j(cQ_{2kl}) + E_{27}\ \partial_i(cQ_{4iklm})\partial_j(cQ_{4jklm}) \\
&+ E_{31}|\nabla^2 c|^2 + E_{32}\ \partial_{ij}(cQ_{2pq})\partial_{ij}(cQ_{2pq}) + E_{33}\ \partial_{ij}(cQ_{2ij})\partial_{kl}(cQ_{2kl}) \\
&+ E_{34}\ \partial_{ik}(cQ_{2ip})\partial_{jk}(cQ_{2jp}) + E_{35}\ \partial_{ij}(cQ_{2ij})\partial_{kk}(c) + E_{36}\ \partial_{ij}(cQ_{4ijkl})\partial_{kl}(c) \\
&+ E_{37}\ \partial_{ij}(cQ_{4ijpq})\partial_{kk}(cQ_{2pq}) + E_{38}\ \partial_{ij}(cQ_{4ijkp})\partial_{kl}(cQ_{2lp}) \\
&+ E_{39}\ \partial_{ij}(cQ_{4ijpq})\partial_{kl}(cQ_{4klpq})\}\mathrm{d}\mathbf{x}.
\end{aligned}
\tag{4.2}
$$

Here E_{ij} only depend on η. B_Q, Z, Q_4 are determined by Q_2 with Bingham closure. This model has only two dimensionless parameters: $\eta = D/L$ and $\alpha = \pi c_0 L^2 D$ where

$$\int c(\mathbf{x})\mathrm{d}\mathbf{x} = c_0.$$

Notice that $c(\mathbf{x})$ now satisfies the constraint

$$\frac{1}{|\Omega|}\int_\Omega c(\mathbf{x})\mathrm{d}\mathbf{x} = 1.$$

4.2 One-dimensional model and numerical results

Based on the tensor model derived above, we consider a one-dimensional model with following two assumptions:

- $f(\mathbf{x}, \mathbf{m})$ only depends on x-axial component and is a periodic function with period d;
- Orientation distribution are uniaxial and the director $\mathbf{n}$ is a constant parallelling with x axis.

Notice all non-trivial tensor components needed are given as

$$
\begin{aligned}
Q_{11} &= \frac{2}{3}S_2, & Q_{22} &= Q_{33} = \frac{1}{3}S_2, \\
Q_{1111} &= \frac{8}{35}S_4, & Q_{1122} &= Q_{1133} = -\frac{4}{35}S_4.
\end{aligned}
$$

Here $S_4(x)$ is determined by Bingham Distribution or say $r(x)$:

$$S_4(x) = \frac{35\displaystyle\int_0^1 t^4 \exp\left(r(x)t^2\right)\,\mathrm{d}t}{8\displaystyle\int_0^1 \exp\left(r(x)t^2\right)\,\mathrm{d}t} - \frac{5}{2}S_2(x) - \frac{7}{8}.$$

Now (4.2) can be furthermore reduced to a one-dimension model with free energy functional as follows:

$$
\begin{aligned}
&\bar{F}_d[c(x), S_2(x)] \\
\triangleq &\int_0^d c(x)\Big(\ln c(x) + \frac{2}{3}r(x)S_2(x) - \ln Z(x)\Big)\mathrm{d}x \\
&+ \frac{\alpha}{2}\int_0^d \Big\{\big(N_{11} + N_{12}S_2^2(x) + N_{13}S_4^2(x)\big)c^2(x) \\
&\qquad - N_{21}\Big(\frac{\mathrm{d}}{\mathrm{d}x}\big(c(x)\big)\Big)^2 - N_{22}\Big(\frac{\mathrm{d}}{\mathrm{d}x}\big(c(x)S_2(x)\big)\Big)^2 - N_{23}\Big(\frac{\mathrm{d}}{\mathrm{d}x}\big(c(x)S_4(x)\big)\Big)^2 \\
&\qquad - N_{24}\frac{\mathrm{d}}{\mathrm{d}x}\big(c(x)S_2(x)\big)\frac{\mathrm{d}}{\mathrm{d}x}\big(c(x)\big) - N_{25}\frac{\mathrm{d}}{\mathrm{d}x}\big(c(x)S_2(x)\big)\frac{\mathrm{d}}{\mathrm{d}x}\big(c(x)S_4(x)\big) \\
&\qquad + N_{31}\Big(\frac{\mathrm{d}^2}{\mathrm{d}x^2}\big(c(x)\big)\Big)^2 + N_{32}\Big(\frac{\mathrm{d}^2}{\mathrm{d}x^2}\big(c(x)S_2(x)\big)\Big)^2\Big\}\mathrm{d}x. \qquad (4.3)
\end{aligned}
$$

All the coefficients N_{ij} could be calculated from the moment calculation and expansion above:

$$
\begin{aligned}
&N_{11} = \frac{1}{2} + 2\eta + \frac{4\eta^2}{3}, && N_{12} = -\frac{5}{16}, && N_{13} = -\frac{9}{128}, \\
&N_{21} = \frac{1}{72} + \frac{\eta}{9} + \frac{5\eta^2}{18} + \frac{\eta^3}{3} + \frac{2\eta^4}{15}, && N_{22} = -\frac{55}{4032} - \frac{(432\ln 2 - 367)\eta^2}{4704}, \\
&N_{23} = \frac{(365 - 2048\ln 2)\eta^2}{12544}, && N_{24} = \frac{7}{288} + \frac{2\eta}{9} + \frac{7\eta^2}{18} + \frac{\eta^3}{6}, \\
&N_{45} = -\frac{1}{112} - \frac{(12\ln 2 - 10)\eta^2}{49}, \\
&N_{31} = \frac{11}{57600} + \frac{13\eta}{5400}, && N_{32} = \frac{107}{451584} + \frac{\eta}{216}.
\end{aligned}
$$

In (4.3) we just keep two second derivative terms and drop other four terms to make our model as simple as possible. In the derivation of the above coefficients, we have made several approximations and truncations. As a result, the numerical value might not be accurate and perhaps some information such as attraction effect and temperature dependence is lost. Then it might cause the free energy functional not bounded from below. Actually, the optimal solution depends on these two coefficients sensitively. Therefore, to find physical solutions, we modify N_{31} and N_{32} in a reasonable range without changing their orders. The main point is that (4.3) should be an effective energy form to capture the smectic-A phase.

To solve the optimization problem

$$
\min_{c(x), S_2(x), d} \left\{\frac{\bar{F}_d}{d}\right\}, \qquad s.t. \quad \frac{1}{d}\int_0^d c(x)\mathrm{d}x = 1,
$$

we use the spectral method. For this, we have to expand $c(x), c(x)S_2(x)$ in terms of fourier bases:

$$
1, \cos\frac{2\pi}{d}x, \sin\frac{2\pi}{d}x, \cdots,
$$

and truncate $c(x), c(x)S_2(x), c(x)S_4(x)$ at order n_1, n_2, n_3, *i.e.*

$$c(x) = 1 + \sum_{n=1}^{n_1} u_n \cos \frac{2n\pi}{d} x,$$

$$c(x)S_2(x) = \sum_{n=0}^{n_2} v_n \cos \frac{2n\pi}{d} x,$$

$$c(x)S_4(x) = \sum_{n=0}^{n_3} w_n \cos \frac{2n\pi}{d} x,$$

$$\ln c(x) + \frac{2}{3} r(x) S_2(x) - \ln Z(x) = \sum_{n=0}^{n_1} t_n \cos \frac{2n\pi}{d} x.$$

Notice that u_n, v_n are variables and w_n, t_n are determined by solving $r(x)$ and integration with FFT. The minimum of the free energy can be found by standard method, for example, the steepest descent method.

Fig. 5 (a) presents a typical phase diagram of three phases. Nematic phase loses stability as concentration increases. The smectic layer periodicity d increases slightly with the increasing of concentration and spans from 1.516 L to 1.532 L, which is quite reasonable according to existing experimental results [11]. It is also worth noting that the boundary of nematic phase in the phase diagram depends on N_{31}, N_{32} and in some cases the system only undergoes direct isotropic-S_A phase transition, which agrees with some experimental results. Fig. 5 (b) reveals typical fluctuations of local number density and nematic order parameter.

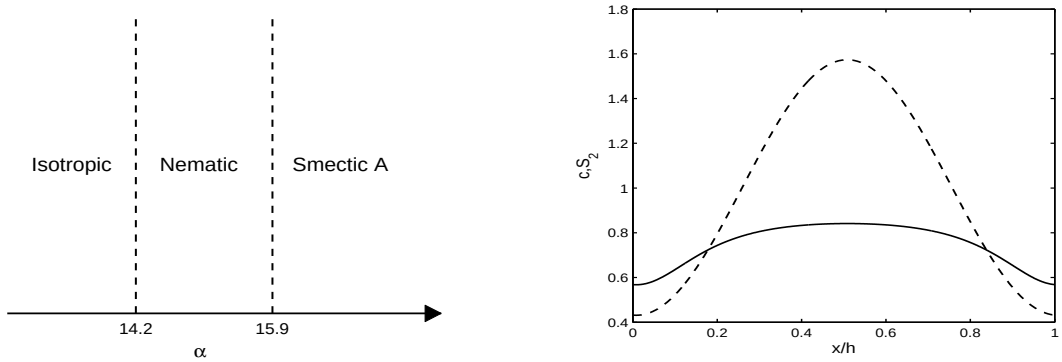

(a) One dimensional phase diagram for isotropic, nematic, smectic-A phase.

(b) Profiles of the local number density $c(x)$ (dashed) and local nematic order parameter (solid) in the smectic-A phase at $\alpha = 17$: $d = 1.519\ L$.

Figure 5: Typical phase diagrams, local number density and order parameter profiles. $\eta = 1/10$, $N_{31} = N_{32} = 0.00089$.

4.3 Discussion on smectics modeling

Nematic-S_A phase transition has been addressed theoretically via different approximations for a long time. Here we briefly review two popular smectic models.

McMillan [28] first put forward a specific model, which is an extension of the Maier-Saupe mean-field theory, characterizing the smectic-A phase by a density modulation. Applying Landau expansions for the entropy term, this model describes a continuous nematic-S_A transition and predicts the existence of a triple critical point where the nematic, isotropic, and smectic-A phase meet. Besides the orientational order parameter defined in the Maier-Saupe theory, an order parameter that describe the positional order of the LC is introduced in McMillan's model. Since the smectic-A phase is uniaxial, the positional order parameter is given by:

$$\sigma_p = \langle \cos(\frac{2\pi z}{d})(\frac{3}{2}\cos^2\theta - \frac{1}{2})\rangle$$

where z and d are the position of the molecule and the layer thickness. The postulated interaction potential reads:

$$U(\theta, z) = -U_1(S + \alpha\sigma_p(\frac{2\pi z}{d}))(\frac{3}{2}\cos^2\theta - \frac{1}{2})$$

where the constant α refers to the strength between adjacent molecules.

Another successful model for smectics is the Chen-Lubensky model [6], which is defined in terms of the director field $\mathbf{n}$ and the complex valued smectic order parameter

$$\Psi(\mathbf{x}) = \rho(\mathbf{x})e^{i\phi(\mathbf{x})},$$

where ϕ refers to the layers and consequently $\nabla\phi$ is the direction of the layer normal. For a perfect nematic phase $\Psi = 0$ while for a smectic phase Ψ will take on complex values.

It is a phenomenological vector model based on the Landau-Ginzburg mean-field theory. The free energy consists of two parts:

$$F^{(CL)} = \int_\Omega F_S + F_N \, \mathrm{d}\mathbf{x},$$

where $F_N = F^{(OF)}$ is the Oseen-Frank energy density for a nematic. The smectic free energy density F_S could be designed to describe either nematic-S_A (or A*) phase transition or nematic-smectic-C (or C*) phase transition. If we only hope to model smectic-A (or A*) phase, the free energy can be simplified to the following form of Landau-de Gennes energy density:

$$F_S = a(T - T_{NS_A})|\Psi|^2 + \frac{1}{2}g|\Psi|^4 - C_\perp|\mathbf{D}\Psi|^2. \tag{4.4}$$

In (4.4) we have: $\mathbf{D} = \nabla - iq\mathbf{n}$; $q \sim 1/d$ where d is the smectic layer thickness; T_{NS_A} is the temperature where nematic-S_A phase transition occurs; the coefficients q,g are positive and $C_\perp \leq 0$ is necessarily required.

The McMillan model and Chen-Lubensky model both require a prior knowledge of the layer thickness d before modeling. Furthermore, the Chen-Lubensky model lacks clear physical interpretations of its various coefficients especially for $C_\perp$ which determines the type of smectic phase. The McMillan model does not take the smectic-C phase into consideration. In Chen-Lubensky model, axially-symmetry like a 'tilt uniaxial' is assumed to describe smectic-C phase. However, physical observations show that LC is biaxial in the smectic-C phase.

Compared with the above two models, layer thickness d need not a priori in our Q-tensor model for smectic-A phase since it is obtained by minimizing the free energy. Although the dependence of coefficient of higher orders on temperature should be studied more deeply, all coefficients in our model could be determined by physical parameters, which provides opportunities to further testify our model through experimental results. We also point out that the Q-tensor model might also be able to describe the smectic-C phase if we relax the assumption to allow director $\mathbf{n}$ tilted with respect to the direction of wave vector and introduce biaxial approximation. All these works would lead to a subject of a separate study.

5 Summary

We have proposed a multiscale modeling hierarchy for liquid crystals connecting Onsager's molecular theory, Q-tensor theory and Oseen-Frank theory explicitly. As an important example, we discussed the simple stick-shape molecule with head-tail symmetry. Once the intermolecular potential is decided (such as hard-core potential or Lennard-Jones potential), we are able to write the integral form of the molecular model. Employing Taylor expansion, the differential form of the molecular model, and Q-tensor can be introduced to simplify the expression. Different truncations and approximations for the high order moments of the kernel function will lead to different models.

To model nematic phase, it is sufficient to truncate at the second order of derivatives. Then we obtain a new Q-tensor type model for nematic liquid crystals, which not only remains sensitive to the macroscopic properties, but also take into account the molecular structure and mechanics as well. Its distortion energy is bounded from below, and the existence of a physically meaningful minimizer is guaranteed. The coefficients in this model are entirely determined by molecular parameters. In addition, the order parameter satisfies the physical constraint on eigenvalues naturally. From this model, we can also recover the Oseen-Frank energy coefficients by the molecular parameters.

On the other hand, if we truncate at the fourth order of derivatives, the obtained model can describe the smectic phase, which is convinced by some numerical results.

Several new models for a variety of molecular structures and interactions can be derived by following the same procedure. All these models shall meet the physical constraints and all the constants shall be interpretable and easy to determine. We believe that these models will help to study other different LC phases.

6 Appendix

6.1 High order traceless symmetric tensor

For any axisymmetric function $f(\mathbf{m}) = f(\mathbf{m}\cdot\mathbf{n})$, we want to calculate

$$\langle \underbrace{\mathbf{m}\otimes\mathbf{m}\otimes\cdots\otimes\mathbf{m}}_{k \text{ times}} \rangle_f.$$

This motivates us to introduce the k-order traceless symmetric tensor on the unit sphere. We use $\widehat{1},\widehat{2},\cdots \in \{1,2,3\}$ to denote subscripts. For $\mathbf{m}\in\mathbb{S}^2$, we define the $(k+2l)$-order

symmetric tensor as follows

$$\sigma(\mathbf{m};k,2l)_{\widehat{1}\widehat{2}\cdots\widehat{m+2l}}=\big(m_{\widehat{1}}m_{\widehat{2}}\cdots m_{\widehat{k}}\delta_{\widehat{k+1}\widehat{k+2}}\cdots\delta_{\widehat{k+2l-1}\widehat{k+2l}}\big)_{\mathrm{sym}}, \tag{6.1}$$

where $(\cdot)_{\mathrm{sym}}$ means the symmetrization of the tensor. For example,

$$\begin{aligned}
&\sigma(\mathbf{m},1,2)=m_\alpha\delta_{\beta\gamma}+m_\beta\delta_{\alpha\gamma}+m_\gamma\delta_{\alpha\beta},\\
&\sigma(\mathbf{m},2,2)=m_\alpha m_\beta\delta_{\gamma\mu}+m_\gamma m_\mu\delta_{\alpha\beta}+m_\alpha m_\gamma\delta_{\beta\mu}+m_\beta m_\mu\delta_{\alpha\gamma}+m_\alpha m_\mu\delta_{\beta\gamma}+m_\beta m_\gamma\delta_{\alpha\mu},\\
&\sigma(\mathbf{m},0,4)=\delta_{\alpha\beta}\delta_{\gamma\mu}+\delta_{\alpha\gamma}\delta_{\beta\mu}+\delta_{\alpha\mu}\delta_{\beta\gamma}.
\end{aligned}$$

Direct computation shows that $\sigma(k,2l)$ is a sum of $\frac{(k+2l)!}{k!l!2^l}$ different tensors. If we contract any two subscripts of $\sigma(k,2l)$, we obtain a sum of some $(k+2l-2)$-order symmetric tensors, i.e,

$$\begin{aligned}
\mathrm{Contract}\big[\sigma(k,2l)\big]=&3\sigma(k,2l-2)+\sigma(k-2,2l)+2k\sigma(k,2l-2)+2(l-1)\sigma(k,2l-2)\\
=&(2k+2l+1)\sigma(k,2l-2)+\sigma(k-2,2l).
\end{aligned}$$

Let

$$\Xi_n(\mathbf{m})=\sum_{l=0}^{[\frac{n}{2}]}a_l\sigma(\mathbf{m};n-2l,2l),\qquad a_0=1.$$

We need Ξ to be *trace free*, that is, if we contract any two subscripts of Ξ, the result tensor should be 0. Therefore,

$$\sum_{l=0}^{[\frac{n}{2}]}a_{n,l}\Big\{(2n-2l+1)\sigma(n-2l,2l-2)+\sigma(n-2l-2,2l)\Big\}=0.$$

Hence

$$\begin{aligned}
&a_{n,0}\sigma(n-2,0)+a_{n,1}\big[(2n-1)\sigma(n-2,0)+\sigma(n-4,2)\big]\\
&\quad+a_{n,2}\big[(2n-3)\sigma(n-4,2)+\sigma(n-6,4)\big]+\cdots=0.
\end{aligned}$$

Thus we have

$$a_{n,l-1}=-(2n-2l+1)a_{n,l},\ \text{for } l\geq 1.$$

Therefore

$$\begin{aligned}
\Xi_n(\mathbf{m})=&\sigma(n,0)-\frac{1}{2n-1}\sigma(n-2,2)+\frac{1}{(2n-1)(2n-3)}\sigma(n-4,4)\\
&-\frac{1}{(2n-1)(2n-3)(2n-5)}\sigma(n-6,6)+\cdots.
\end{aligned}$$

The following are some examples:

$$\begin{aligned}
\Xi_1(\mathbf{m}) &= \mathbf{m};\\
\Xi_2(\mathbf{m}) &= m_\alpha m_\beta - \frac{1}{3}\delta_{\alpha\beta};\\
\Xi_3(\mathbf{m}) &= m_\alpha m_\beta m_\gamma - \frac{1}{5}\Big(m_\alpha\delta_{\beta\gamma} + m_\beta\delta_{\alpha\gamma} + m_\gamma\delta_{\alpha\beta}\Big);\\
\Xi_4(\mathbf{m}) &= m_\alpha m_\beta m_\gamma m_\mu - \frac{1}{7}\Big(m_\alpha m_\beta\delta_{\gamma\mu} + m_\gamma m_\mu\delta_{\alpha\beta} + m_\alpha m_\gamma\delta_{\beta\mu} + m_\beta m_\mu\delta_{\alpha\gamma}\\
&\qquad + m_\alpha m_\mu\delta_{\beta\gamma} + m_\beta m_\gamma\delta_{\alpha\mu}\Big) + \frac{1}{35}\Big(\delta_{\alpha\beta}\delta_{\gamma\mu} + \delta_{\alpha\gamma}\delta_{\beta\mu} + \delta_{\alpha\mu}\delta_{\beta\gamma}\Big);\\
\Xi_5(\mathbf{m}) &= m_\alpha m_\beta m_\gamma m_\mu m_\nu - \frac{1}{9}\Big(m_\alpha m_\beta m_\gamma\delta_{\mu\nu} + \cdots\Big) + \frac{1}{63}\Big(m_\alpha\delta_{\beta\gamma}\delta_{\mu\nu} + \cdots\Big).
\end{aligned}$$

Let P_n be the Legendre polynomials:

$$P_n(x) = 2^n\sum_{k=0}^{n} x^k\binom{n}{k}\binom{\frac{n+k-1}{2}}{n} = \frac{1}{n!}\sum_{k=0}^{[\frac{n}{2}]}(-1)^k(2n-2k-1)!!\frac{n!}{(n-2k)!k!2^k}x^{n-2k}. \tag{6.2}$$

The following proposition enables us to calculate $\langle\underbrace{\mathbf{m}\otimes\mathbf{m}\otimes\cdots\otimes\mathbf{m}}_{k\text{ times}}\rangle_f$ for any axisymmetric function $f(\mathbf{m}) = f(\mathbf{m}\cdot\mathbf{n})$.

Proposition 6.1. *For any axisymmetric function on $\mathbb{S}^2$: $f(\mathbf{m}) = f(\mathbf{m}\cdot\mathbf{n})$, define $S_k[f] = \int_{\mathbb{S}^2} P_k(\mathbf{m}\cdot\mathbf{n})f(\mathbf{m})\mathrm{d}\mathbf{m}$. Then we have*

$$\int_{\mathbb{S}^2}\Xi_k(\mathbf{m},n)f(\mathbf{m})\mathrm{d}\mathbf{m} = S_k(f)\Xi_k(\mathbf{n}). \tag{6.3}$$

6.2 The calculation of the zero-th, second and fourth moment for the hard-core interaction potential

Recall that we separate the whole area into the following three regions:

- region A (body-body): a $2D$-high parallelepiped whose section is a rhombus with side-length L and angle γ;
- region B (body-end): four semi-columns with side-length L and radius D;
- region C (end-end): four radius D sphere at the corner.

For the zero-th moment, in region A let

$$(x,y,z) \to ((u+v)\cos\beta, (u-v)\sin\beta, z),$$

$$u\in[-L/2,L/2], \qquad v\in[-L/2,L/2], \qquad z\in[-D,D],$$

then we have

$$\left|\frac{\partial(x,y,z)}{\partial(u,v,z)}\right| = \sin\gamma.$$

In region B, let

$$(x, y, z) \to (t\cos\beta + r\sin\beta\sin\theta, (L-t)\sin\beta + r\cos\beta\sin\theta, r\cos\theta),$$

$$t \in [0, L], \qquad r \in [0, D], \qquad \theta \in [0, \pi],$$

then we have

$$\left|\frac{\partial(x, y, z)}{\partial(t, r, \theta)}\right| = r.$$

In region C, on the one hand, define the region that crosses the real part of y-axis as CI. Using coordinates which satisfies:

$$(x, y, z) = (r\sin\theta\cos\phi, L\sin\beta + r\sin\theta\sin\phi, r\cos\theta),$$

$$r \in [0, D], \qquad \theta \in [0, \pi], \qquad \phi \in [\frac{\pi}{2} - \beta, \frac{\pi}{2} + \beta],$$

then we have

$$\left|\frac{\partial(x, y, z)}{\partial(r, \theta, \phi)}\right| = r^2\sin\theta.$$

On the other hand, define the region that crosses the real part of x-axis as CII, and let

$$(x, y, z) \to (L\cos\beta + r\sin\theta\cos\phi, r\sin\theta\sin\phi, r\cos\theta),$$

$$r \in [0, D], \qquad \theta \in [0, \pi], \qquad \phi \in [-\frac{\pi}{2} + \beta, \frac{\pi}{2} - \beta].$$

We also have:

$$\left|\frac{\partial(x, y, z)}{\partial(r, \theta, \phi)}\right| = r^2\sin\theta$$

Summing up all the above regions, the total excluded-volume (i.e. the zero moment of the hard-core potential) reads:

$$\int G(|\mathbf{r}|, \mathbf{m}, \mathbf{m}')\,\mathrm{d}\mathbf{r} = 2L^2D\sin\gamma + 2\pi D^2L + \frac{4}{3}\pi D^3.$$

Following the same process, we can work out the second moment. In region A, we have

$$\begin{aligned}\int_{\mathrm{A}} G(|\mathbf{r}|, \mathbf{m}, \mathbf{m}') \begin{bmatrix} r_1^2 \\ r_2^2 \\ r_3^2 \end{bmatrix} \mathrm{d}\mathbf{r} = & \sin\gamma \int_{-D}^{D}\int_{-L/2}^{L/2}\int_{-L/2}^{L/2} \begin{bmatrix} (u+v)^2\cos^2\beta \\ (u-v)^2\sin^2\beta \\ z^2 \end{bmatrix} \mathrm{d}u\mathrm{d}v\mathrm{d}z \\ = & \begin{bmatrix} L^4D\cos^2\beta\sin\gamma/3 \\ L^4D\sin^2\beta\sin\gamma/3 \\ 2L^2D^3\sin\gamma/3 \end{bmatrix}.\end{aligned}$$

In region B, we can get

$$
\begin{aligned}
&\int_{\mathrm{B}} G(|\mathbf{r}|,\mathbf{m},\mathbf{m}')\begin{bmatrix} r_1^2 \\ r_2^2 \\ r_3^2 \end{bmatrix}\mathrm{d}\mathbf{r} \\
=\ & 4\int_0^L\int_0^D\int_0^\pi r\begin{bmatrix} (t\cos\beta + r\sin\beta\sin\theta)^2 \\ ((L-t)\sin\beta + r\cos\beta\sin\theta)^2 \\ (r\cos\theta)^2 \end{bmatrix}\mathrm{d}\theta\mathrm{d}r\mathrm{d}t \\
=\ & 4\int_0^L\int_0^D\int_0^\pi \begin{bmatrix} rt^2\cos^2\beta + r^2t\sin\gamma\sin\theta + r^3\sin^2\beta\sin^2\theta \\ r(L-t)^2\cos^2\beta + r^2(L-t)\sin\gamma\sin\theta + r^3\sin^2\beta\sin^2\theta \\ r^3\cos^2\theta \end{bmatrix}\mathrm{d}\theta\mathrm{d}r\mathrm{d}t \\
=\ & \begin{bmatrix} 2\pi L^3D^2\cos^2\beta/3 + 4L^2D^3\sin\gamma/3 + \pi LD^4\sin^2\beta/2 \\ 2\pi L^3D^2\sin^2\beta/3 + 4L^2D^3\sin\gamma/3 + \pi LD^4\cos^2\beta/2 \\ \pi LD^4/2 \end{bmatrix}.
\end{aligned}
$$

And in region CI and CII, it reads:

$$
\begin{aligned}
&\int_{\mathrm{CI}} G(|\mathbf{r}|,\mathbf{m},\mathbf{m}')\begin{bmatrix} r_1^2 \\ r_2^2 \\ r_3^2 \end{bmatrix}\mathrm{d}\mathbf{r} \\
=\ & \int_0^D\int_0^\pi\int_{\pi/2-\beta}^{\pi/2+\beta} r^2\sin\theta\begin{bmatrix} (r\sin\theta\cos\varphi)^2 \\ (L\sin\beta + r\sin\theta\sin\varphi)^2 \\ (r\cos\theta)^2 \end{bmatrix}\mathrm{d}\varphi\mathrm{d}\theta\mathrm{d}r \\
=\ & \int_0^D\int_0^\pi\int_{\pi/2-\beta}^{\pi/2+\beta} \begin{bmatrix} r^4\sin^3\theta\cos^2\varphi \\ L^2r^2\sin^2\beta\sin\theta + 2Lr^3\sin\beta\sin^2\theta\sin\varphi + r^4\sin^3\theta\sin^2\varphi \\ r^4\cos^2\theta\sin\theta \end{bmatrix}\mathrm{d}\varphi\mathrm{d}\theta\mathrm{d}r \\
=\ & \begin{bmatrix} 2D^5(\gamma - \sin\gamma)/15 \\ 2L^2D^3\gamma\sin^2\beta/3 + \pi LD^4\sin^2\beta/2 + 2D^5(\gamma + \sin\gamma)/15 \\ 2D^5\gamma/15 \end{bmatrix},
\end{aligned}
$$

$$
\begin{aligned}
&\int_{\mathrm{CII}} G(|\mathbf{r}|,\mathbf{m},\mathbf{m}')\begin{bmatrix} r_1^2 \\ r_2^2 \\ r_3^2 \end{bmatrix}\mathrm{d}\mathbf{r} \\
=\ & \int_0^D\int_0^\pi\int_{-\pi/2+\beta}^{\pi/2-\beta} r^2\sin\theta \begin{bmatrix} (L\cos\beta + r\sin\theta\cos\varphi)^2 \\ (r\sin\theta\sin\varphi)^2 \\ (r\cos\theta)^2 \end{bmatrix}\mathrm{d}\varphi\mathrm{d}\theta\mathrm{d}r \\
=\ & \int_0^D\int_0^\pi\int_{-\pi/2+\beta}^{\pi/2-\beta} \begin{bmatrix} L^2r^2\cos^2\beta\sin\theta + 2Lr^3\cos\beta\sin^2\theta cos\varphi + r^4\sin^3\theta\cos^2\varphi \\ r^4\sin^3\theta\sin^2\varphi \\ r^4\cos^2\theta\sin\theta \end{bmatrix}\mathrm{d}\varphi\mathrm{d}\theta\mathrm{d}r \\
=\ & \begin{bmatrix} 2L^2D^3(\pi-\gamma)\cos^2\beta/3 + \pi LD^4\cos^2\gamma/2 + 2D^5(\pi-\gamma+\sin\gamma)/15 \\ 2D^5(\pi-\gamma-\sin\gamma)/15 \\ 2D^5(\pi-\gamma)/15 \end{bmatrix}.
\end{aligned}
$$

Summing them up, we can finally get the entire second moment matrix $\mathrm{diag}(M_1, M_2, M_3)$ as follows:

$$
\begin{bmatrix} L^4D\left\{\left(\frac{\sin\gamma}{3}+\frac{2\pi\eta}{3}+\frac{4(\pi-\gamma)\eta^2}{3}+\pi\eta^3\right)\cos^2\beta + \left(\frac{4\sin\gamma\ \eta^2}{3}+\frac{\pi\sin^2\beta\ \eta^3}{2}+\frac{4\pi\eta^4}{15}\right)\right\} \\ L^4D\left\{\left(\frac{\sin\gamma}{3}+\frac{2\pi\eta}{3}+\frac{4\gamma\eta^2}{3}+\pi\eta^3\right)\sin^2\beta + \left(\frac{4\sin\gamma\ \eta^2}{3}+\frac{\pi\cos^2\beta\ \eta^3}{2}+\frac{4\pi\eta^4}{15}\right)\right\} \\ L^2D^3\left(\frac{2\sin\gamma}{3}+\frac{\pi\eta}{2}+\frac{4\pi\eta^2}{15}\right) \end{bmatrix}.
$$

Following the similar process, we can also work out the fourth moment, which is used to modeling the smectic phase. In region A, we have

$$
\begin{aligned}
\int_{\mathrm{A}} G(|\mathbf{r}|,\mathbf{m},\mathbf{m}')\begin{bmatrix} r_1^4 \\ r_2^4 \\ r_3^4 \end{bmatrix}\mathrm{d}\mathbf{r} =\ & \sin\gamma\int_{-D}^{D}\int_{-L/2}^{L/2}\int_{-L/2}^{L/2}\begin{bmatrix} (u+v)^4\cos^4\beta \\ (u-v)^4\sin^4\beta \\ z^4 \end{bmatrix}\mathrm{d}u\mathrm{d}v\mathrm{d}z \\
=\ & \begin{bmatrix} 2L^6D\cos^4\beta\sin\gamma/15 \\ 2L^6D\sin^4\beta\sin\gamma/15 \\ 2L^2D^5\sin\gamma/5 \end{bmatrix},
\end{aligned}
$$

$$
\begin{aligned}
\int_{\mathrm{A}} G(|\mathbf{r}|,\mathbf{m},\mathbf{m}')\begin{bmatrix} r_1^2r_2^2 \\ r_2^2r_3^2 \\ r_1^2r_3^2 \end{bmatrix}\mathrm{d}\mathbf{r} =\ & \sin\gamma\int_{-D}^{D}\int_{-L/2}^{L/2}\int_{-L/2}^{L/2}\begin{bmatrix} (u^2-v^2)^2\cos^2\beta\sin^2\beta \\ (u-v)^2\sin^2\beta z^2 \\ (u+v)^2\cos^2\beta z^2 \end{bmatrix}\mathrm{d}u\mathrm{d}v\mathrm{d}z \\
=\ & \begin{bmatrix} L^6D\cos^2\beta\sin^2\beta\sin\gamma/45 \\ L^4D^3\sin^2\beta\sin\gamma/9 \\ L^4D^3\cos^2\beta\sin\gamma/9 \end{bmatrix}.
\end{aligned}
$$

In region B, we get

$$
\begin{aligned}
&\int_{\mathrm{B}} G(\mathbf{m},\mathbf{m}',\mathbf{r}) \begin{bmatrix} r_1^4 \\ r_2^4 \\ r_3^4 \end{bmatrix} \mathrm{d}\mathbf{r} \\
&= 4\int_0^L \int_0^D \int_0^\pi r \begin{bmatrix} (t\cos\beta + r\sin\beta\sin\theta)^4 \\ ((L-t)\sin\beta + r\cos\beta\sin\theta)^4 \\ (r\cos\theta)^4 \end{bmatrix} \mathrm{d}\theta\mathrm{d}r\mathrm{d}t \\
&= \begin{bmatrix} 2\pi L^5 D^2\cos^4\beta/5 + 8L^4D^3\cos^3\beta\sin\beta/3 + \pi L^3D^4\cos^2\beta\sin^2\beta \\ +32L^2D^5\cos\beta\sin^3\beta/15 + \pi LD^6\sin^4\beta/4 \\ 2\pi L^5D^2\sin^4\beta/5 + 8L^4D^3\sin^3\beta\cos\beta/3 + \pi L^3D^4\sin^2\beta\cos^2\beta \\ +32L^2D^5\sin\beta\cos^3\beta/15 + \pi LD^6\cos^4\beta/4 \\ \pi LD^6/4 \end{bmatrix},
\end{aligned}
$$

$$
\begin{aligned}
&\int_{\mathrm{B}} G(\mathbf{m},\mathbf{m}',\mathbf{r}) \begin{bmatrix} r_1^2r_2^2 \\ r_2^2r_3^2 \\ r_1^2r_3^2 \end{bmatrix} \mathrm{d}\mathbf{r} \\
&= 4\int_0^L \int_0^D \int_0^\pi r \begin{bmatrix} (t\cos\beta + r\sin\beta\sin\theta)^2((L-t)\sin\beta + r\cos\beta\sin\theta)^2 \\ ((L-t)\sin\beta + r\cos\beta\sin\theta)^2(r\cos\theta)^2 \\ (t\cos\beta + r\sin\beta\sin\theta)^2(r\cos\theta)^2 \end{bmatrix} \mathrm{d}\theta\mathrm{d}r\mathrm{d}t \\
&= \begin{bmatrix} \pi L^3D^4(\cos^4\beta + \sin^4\beta)/6 + (4L^4D^3/9 + 16L^2D^5/15)(\cos^3\beta\sin\beta + \sin^3\beta\cos\beta) \\ +(\pi L^5D^2/15 + \pi L^3D^4/3 + \pi LD^6/4)\cos^2\beta\sin^2\beta \\ \pi L^3D^4\sin^2\beta/6 + 8L^2D^5\cos\beta\sin\beta/15 + \pi LD^6\cos^2\beta/12 \\ \pi L^3D^4\cos^2\beta/6 + 8L^2D^5\cos\beta\sin\beta/15 + \pi LD^6\sin^2\beta/12 \end{bmatrix}.
\end{aligned}
$$

Finally in region CI and CII, it reads

$$
\begin{aligned}
&\int_{\mathrm{CI}} G(|\mathbf{r}|,\mathbf{m},\mathbf{m}') \begin{bmatrix} r_1^4 \\ r_2^4 \\ r_3^4 \end{bmatrix} \mathrm{d}\mathbf{r} \\
&= \int_0^D \int_0^\pi \int_{\pi/2-\beta}^{\pi/2+\beta} r^2\sin\theta \begin{bmatrix} (r\sin\theta\cos\varphi)^4 \\ (L\sin\beta + r\sin\theta\sin\varphi)^4 \\ (r\cos\theta)^4 \end{bmatrix} \mathrm{d}\varphi\mathrm{d}\theta\mathrm{d}r \\
&= \begin{bmatrix} 16D^7(3\beta/4 + \cos^3\beta\sin\beta/4 - \sin^3\beta\cos\beta/4 - \cos\beta\sin\beta)/105 \\ 2L^4D^3(2\beta)\sin^4\beta/3 + \pi L^3D^4\sin^4\beta + 8L^2D^5\sin^2\beta(\beta + \cos\beta\sin\beta)/5 \\ +\pi LD^6\sin^2\beta(3 - \sin^2\beta)/6 \\ +16D^7(3\beta/4 + \cos^3\beta\sin\beta/4 - \sin^3\beta\cos\beta/4 + \cos\beta\sin\beta)/105 \\ 4D^7\beta/35 \end{bmatrix},
\end{aligned}
$$

$$
\begin{aligned}
&\int_{\mathrm{CI}} G(|\mathbf{r}|,\mathbf{m},\mathbf{m}')\begin{bmatrix} r_1^2 r_2^2 \\ r_2^2 r_3^2 \\ r_1^2 r_3^2 \end{bmatrix}\mathrm{d}\mathbf{r} \\
&= \int_0^D \int_0^\pi \int_{\pi/2-\beta}^{\pi/2+\beta} r^2 \sin\theta \begin{bmatrix} (r\sin\theta\cos\varphi)^2 (L\sin\beta + r\sin\theta\sin\varphi)^2 \\ (L\sin\beta + r\sin\theta\sin\varphi)^2 (r\cos\theta)^2 \\ (r\cos\theta)^2 (r\sin\theta\cos\varphi)^2 \end{bmatrix} \mathrm{d}\varphi\mathrm{d}\theta\mathrm{d}r \\
&= \begin{bmatrix} 4L^2D^5\sin^2\beta(\beta-\cos\beta\sin\beta)/15 + \pi L D^6 \sin^4\beta/12 \\ +16D^7(\beta/4-\cos^3\beta\sin\beta/4+\sin^3\beta\cos\beta/4)/105 \\ 2L^2D^5(2\beta)\sin^2\beta/15 + \pi L D^6\sin^2\beta/12 + 4D^7(\beta+\cos\beta\sin\beta)/105 \\ 4D^7(\beta-\cos\beta\sin\beta)/105 \end{bmatrix},
\end{aligned}
$$

$$
\begin{aligned}
&\int_{\mathrm{CII}} G(|\mathbf{r}|,\mathbf{m},\mathbf{m}')\begin{bmatrix} r_1^4 \\ r_2^4 \\ r_3^4 \end{bmatrix}\mathrm{d}\mathbf{r} \\
&= \int_0^D \int_0^\pi \int_{-\pi/2+\beta}^{\pi/2-\beta} r^2 \sin\theta \begin{bmatrix} (L\cos\beta + r\sin\theta\cos\varphi)^4 \\ (r\sin\theta\sin\varphi)^4 \\ (r\cos\theta)^4 \end{bmatrix} \mathrm{d}\varphi\mathrm{d}\theta\mathrm{d}r \\
&= \begin{bmatrix} 2L^4D^3(\pi-2\beta)\cos^4\beta/3 + \pi L^3D^4\cos^4\beta + 8L^2D^5\cos^2\beta(\pi/2-\beta+\cos\beta\sin\beta)/5 \\ +\pi L D^6\cos^2\beta(3-\cos^2\beta)/6 \\ +16D^7(3\pi/8-3\beta/4-\cos^3\beta\sin\beta/4+\sin^3\beta\cos\beta/4+\cos\beta\sin\beta)/105 \\ 16D^7(3\pi/8-3\beta/4-\cos^3\beta\sin\beta/4+\sin^3\beta\cos\beta/4-\cos\beta\sin\beta)/105 \\ 2D^7(\pi-2\beta)/35 \end{bmatrix},
\end{aligned}
$$

$$
\begin{aligned}
&\int_{\mathrm{CII}} G(|\mathbf{r}|,\mathbf{m},\mathbf{m}')\begin{bmatrix} r_1^2 r_2^2 \\ r_2^2 r_3^2 \\ r_1^2 r_3^2 \end{bmatrix}\mathrm{d}\mathbf{r} \\
&= \int_0^D \int_0^\pi \int_{-\pi/2+\beta}^{\pi/2-\beta} r^2 \sin\theta \begin{bmatrix} (L\cos\beta + r\sin\theta\cos\varphi)^2 (r\sin\theta\sin\varphi)^2 \\ (r\sin\theta\sin\varphi)^2 (r\cos\theta)^2 \\ (r\cos\theta)^2 (L\cos\beta + r\sin\theta\cos\varphi)^2 \end{bmatrix} \mathrm{d}\varphi\mathrm{d}\theta\mathrm{d}r \\
&= \begin{bmatrix} 4L^2D^5\cos^2\beta(\pi/2-\beta-\cos\beta\sin\beta)/15 + \pi L D^6\cos^4\beta/12 \\ +16D^7(\pi/8-\beta/4+\cos^3\beta\sin\beta/4-\sin^3\beta\cos\beta/4)/105 \\ 4D^7(\pi/2-\beta-\cos\beta\sin\beta)/105 \\ 2L^2D^5(\pi-2\beta)\cos^2\beta/15 + \pi L D^6\cos^2\beta/12 + 4D^7(\pi/2-\beta+\cos\beta\sin\beta)/105 \end{bmatrix}.
\end{aligned}
$$

Sum them up, and finally we gain the entire fourth moment result as follows:

$$
\int G(|\mathbf{r}|,\mathbf{m},\mathbf{m}')\begin{bmatrix} r_1^4 \\ r_2^4 \\ r_3^4 \end{bmatrix}\,\mathrm{d}\mathbf{r}
$$

$$
= \begin{bmatrix}
L^6 D\Bigg\{\left(\frac{2\sin\gamma}{15}+\frac{2\pi\eta}{5}+\frac{4(\pi-\gamma)\eta^2}{3}+2\pi\eta^3-\frac{\pi\eta^5}{12}\right)\cos^4\beta+\left(\frac{8\eta^2}{3}+\frac{16\eta^4}{15}\right)\cos^3\beta\sin\beta \\
\left(\pi\eta^3+\frac{8(\pi-\gamma)\eta^4}{5}+\frac{\pi\eta^5}{2}\right)\cos^2\beta+\frac{32\eta^4}{15}\cos\beta\sin\beta+\left(\frac{\pi\eta^5}{4}+\frac{4\pi\eta^6}{35}\right)\Bigg\} \\
L^6 D\Bigg\{\left(\frac{2\sin\gamma}{15}+\frac{2\pi\eta}{5}+\frac{4\gamma\eta^2}{3}+2\pi\eta^3-\frac{\pi\eta^5}{12}\right)\sin^4\beta+\left(\frac{8\eta^2}{3}+\frac{16\eta^4}{15}\right)\sin^3\beta\cos\beta \\
\left(\pi\eta^3+\frac{8\gamma\eta^4}{5}+\frac{\pi\eta^5}{2}\right)\sin^2\beta+\frac{32\eta^4}{15}\sin\beta\cos\beta+\left(\frac{\pi\eta^5}{4}+\frac{4\pi\eta^6}{35}\right)\Bigg\} \\
L^6 D\left\{\frac{2\sin\gamma\ \eta^4}{5}+\frac{\pi\eta^5}{4}+\frac{4\pi\eta^6}{35}\right\}
\end{bmatrix},
$$

$$
\int G(|\mathbf{r}|,\mathbf{m},\mathbf{m}')\begin{bmatrix} r_1^2 r_2^2 \\ r_2^2 r_3^2 \\ r_1^2 r_3^2 \end{bmatrix}\,\mathrm{d}\mathbf{r}
$$

$$
= \begin{bmatrix}
L^6 D\Bigg\{\left(\frac{\sin\gamma}{45}+\frac{\pi\eta}{15}-\frac{\pi\eta^5}{12}\right)\cos^2\beta\sin^2\beta+\left(\frac{4\eta^2}{9}+\frac{8\eta^4}{15}\right)\cos\beta\sin\beta \\
+\frac{4\eta^4}{15}(\gamma\sin^2\beta+(\pi-\gamma)\cos^2\beta)+\left(\frac{\pi\eta^3}{6}+\frac{\pi\eta^5}{6}+\frac{4\pi\eta^6}{105}\right)\Bigg\} \\
L^6 D\left\{\left(\frac{\sin\gamma\ \eta^2}{9}+\frac{\pi\eta^3}{6}+\frac{4\gamma\eta^4}{15}+\frac{\pi\eta^5}{12}\right)\sin^2\beta+\frac{8\eta^4}{15}\cos\beta\sin\beta+\left(\frac{\pi\eta^5}{12}+\frac{4\pi\eta^6}{105}\right)\right\} \\
L^6 D\left\{\left(\frac{\sin\gamma\ \eta^2}{9}+\frac{\pi\eta^3}{6}+\frac{4(\pi-\gamma)\eta^4}{15}+\frac{\pi\eta^5}{12}\right)\cos^2\beta+\frac{8\eta^4}{15}\cos\beta\sin\beta+\left(\frac{\pi\eta^5}{12}+\frac{4\pi\eta^6}{105}\right)\right\}
\end{bmatrix}.
$$

Similar to the decomposition of second moment, we let

$$
\begin{aligned}
&M^{(4)}\\
&= W_1(\mathbf{m},\mathbf{m}')\ \mathbf{n}_1\mathbf{n}_1\mathbf{n}_1\mathbf{n}_1 + W_2(\mathbf{m},\mathbf{m}')\ \mathbf{n}_2\mathbf{n}_2\mathbf{n}_2\mathbf{n}_2 + W_3(\mathbf{m},\mathbf{m}')\ \mathbf{n}_3\mathbf{n}_3\mathbf{n}_3\mathbf{n}_3\\
&\quad +W_4(\mathbf{m},\mathbf{m}')\ (\mathbf{n}_1\mathbf{n}_1\mathbf{n}_2\mathbf{n}_2)_{\text{sym}} + W_5(\mathbf{m},\mathbf{m}')\ (\mathbf{n}_2\mathbf{n}_2\mathbf{n}_3\mathbf{n}_3)_{\text{sym}}\\
&\quad +W_6(\mathbf{m},\mathbf{m}')\ (\mathbf{n}_1\mathbf{n}_1\mathbf{n}_3\mathbf{n}_3)_{\text{sym}}\\
&= \frac{W_3}{3}(\delta_{ij}\delta_{kl})_{\text{sym}} + (W_1+W_3-6W_6)\ \mathbf{n}_1\mathbf{n}_1\mathbf{n}_1\mathbf{n}_1\\
&\quad +(W_2+W_3-6W_5)\ \mathbf{n}_2\mathbf{n}_2\mathbf{n}_2\mathbf{n}_2 + (W_4+\frac{W_3}{3}-W_5-W_6)(\mathbf{n}_1\mathbf{n}_1\mathbf{n}_2\mathbf{n}_2)_{\text{sym}}\\
&\quad +(W_6-\frac{W_3}{3})(\delta_{ij}\mathbf{n}_1\mathbf{n}_1)_{\text{sym}} + (W_5-\frac{W_3}{3})(\delta_{ij}\mathbf{n}_2\mathbf{n}_2)_{\text{sym}}.\\
&= \frac{W_3}{3}(\delta_{ij}\delta_{kl})_{\text{sym}} + \frac{W_1+W_3-6W_6}{16\cos^4\beta}\Big[(\mathbf{mmmm}+\mathbf{m}'\mathbf{m}'\mathbf{m}'\mathbf{m}') + (\mathbf{mmm}'\mathbf{m}')_{\text{sym}}\\
&\quad +(\mathbf{mmmm}'+\mathbf{m}'\mathbf{m}'\mathbf{m}'\mathbf{m})_{\text{sym}}\Big] + \frac{W_2+W_3-6W_5}{16\sin^4\beta}\Big[(\mathbf{mmmm}+\mathbf{m}'\mathbf{m}'\mathbf{m}'\mathbf{m}')\\
&\quad +(\mathbf{mmm}'\mathbf{m}')_{\text{sym}} - (\mathbf{mmmm}'+\mathbf{m}'\mathbf{m}'\mathbf{m}'\mathbf{m})_{\text{sym}}\Big]\\
&\quad +\frac{W_3/3+W_4-W_5-W_6}{16\cos^2\beta\sin^2\beta}\Big[6(\mathbf{mmmm}+\mathbf{m}'\mathbf{m}'\mathbf{m}'\mathbf{m}') - 2(\mathbf{mmm}'\mathbf{m}')_{\text{sym}}\Big]\\
&\quad +\frac{W_6-W_3/3}{4\cos^2\beta}\Big[(\delta_{ij}\mathbf{mm}+\delta_{ij}\mathbf{m}'\mathbf{m}')_{\text{sym}} + (\delta_{ij}\mathbf{mm}')_{\text{sym}}\Big]\\
&\quad +\frac{W_5-W_3/3}{4\sin^2\beta}\Big[(\delta_{ij}\mathbf{mm}+\delta_{ij}\mathbf{m}'\mathbf{m}')_{\text{sym}} - (\delta_{ij}\mathbf{mm}')_{\text{sym}}\Big]
\end{aligned}
$$

Direct simplification gives us (4.1).

6.3 The derivation of the elastic energy in the Q-tensor form

Dropping the high order terms, we can get

$$
\begin{aligned}
\frac{4}{\pi L^4 D k_B T}F^{(2)}_{\text{elastic}} &= -\int\Big\{\Big(\alpha_{11}+\alpha_{12}P_2(\mathbf{m}\cdot\mathbf{m}')+\alpha_{13}P_4(\mathbf{m}\cdot\mathbf{m}')\Big)\partial_i f(\mathbf{x},\mathbf{m}')\partial_i f(\mathbf{x},\mathbf{m})\\
&\quad +\Big(\alpha_{21}-\frac{1}{2}\alpha_{22}+\alpha_{22}\frac{3}{2}(\mathbf{m}\cdot\mathbf{m}')^2\Big)(\mathbf{mm}+\mathbf{m}'\mathbf{m}'):\nabla f(\mathbf{x},\mathbf{m}')\nabla f(\mathbf{x},\mathbf{m})\\
&\quad +\Big(\big(\alpha_{31}-\frac{1}{2}\alpha_{32}\big)\mathbf{m}\cdot\mathbf{m}'+\frac{3}{2}\alpha_{32}(\mathbf{m}\cdot\mathbf{m}')^2\Big)(\mathbf{mm}'+\mathbf{m}'\mathbf{m}):\nabla f(\mathbf{x},\mathbf{m}')\nabla f(\mathbf{x},\mathbf{m})\Big\}\mathrm{d}\mathbf{m}'\mathrm{d}\mathbf{m}\\
&= -\int\Big\{\Big(\alpha_{11}+\frac{3}{2}\alpha_{12}\Xi_2:\Xi_2'+\frac{35}{8}\alpha_{13}\Xi_4:\Xi_4'\Big)\partial_i f(\mathbf{x},\mathbf{m}')\partial_i f(\mathbf{x},\mathbf{m})\\
&\quad +\Big(\alpha_{21}(\Xi_2+\Xi_2'+\frac{2}{3}\mathbf{I})+3\alpha_{22}\mathbf{mmmm}:\Xi_2'\Big)\nabla f(\mathbf{x},\mathbf{m}')\nabla f(\mathbf{x},\mathbf{m})\\
&\quad +\big(\alpha_{31}-\frac{1}{2}\alpha_{32}\big)(\Xi_2\cdot\Xi_2'+\Xi_2'\cdot\Xi_2+\frac{2}{3}\Xi_2+\frac{2}{3}\Xi_2'+\frac{2}{9}\mathbf{I}):\nabla f(\mathbf{x},\mathbf{m}')\nabla f(\mathbf{x},\mathbf{m})\\
&\quad +\frac{3}{2}\alpha_{32}(\mathbf{m}\cdot\mathbf{m}')^3(\mathbf{mm}'+\mathbf{m}'\mathbf{m}):\nabla f(\mathbf{x},\mathbf{m}')\nabla f(\mathbf{x},\mathbf{m})\Big\}\mathrm{d}\mathbf{m}'\mathrm{d}\mathbf{m}
\end{aligned}
\tag{6.4}
$$

It is direct to check that

$$
\begin{aligned}
&(\mathbf{m}\cdot\mathbf{m}')\mathbf{m}\mathbf{m}' = \Xi_2\cdot\Xi_2' + \frac{1}{3}(\Xi_2+\Xi_2') + \frac{1}{9}\mathbf{I}.\\
&\mathbf{m}\mathbf{m}\mathbf{m}\mathbf{m}:\Xi_2' = \Xi_4:\Xi_2' + \frac{1}{7}\Big(2\Xi_2\cdot\Xi_2' + 2\Xi_2'\cdot\Xi_2 + \mathbf{I}\Xi_2:\Xi_2'\Big) + \frac{2}{15}\Xi_2',\\
&(\mathbf{m}\cdot\mathbf{m}')^2(\mathbf{m}\mathbf{m}+\mathbf{m}'\mathbf{m}') = \mathbf{m}\mathbf{m}\mathbf{m}\mathbf{m}:\Xi_2' + \mathbf{m}'\mathbf{m}'\mathbf{m}'\mathbf{m}':\Xi_2 + \frac{1}{3}(\Xi_2+\Xi_2'+\frac{2}{3}\mathbf{I}),
\end{aligned}
$$

and

$$
\begin{aligned}
&\Xi_{4,\alpha\gamma\mu\nu}\Xi_{4,\beta\gamma\mu\nu}'\\
&= (\mathbf{m}\cdot\mathbf{m}')^3\mathbf{m}\mathbf{m}' - \frac{15}{49}(\mathbf{m}\cdot\mathbf{m}')\mathbf{m}\mathbf{m}' + \frac{6}{49}(\mathbf{m}\cdot\mathbf{m}')\mathbf{m}'\mathbf{m} - \frac{3}{7}(\mathbf{m}\cdot\mathbf{m}')^2(\mathbf{m}\mathbf{m}+\mathbf{m}'\mathbf{m}')\\
&\qquad + \frac{3}{49}(\mathbf{m}\mathbf{m}+\mathbf{m}'\mathbf{m}') + \frac{3}{49}(\mathbf{m}\cdot\mathbf{m}')^2\mathbf{I} - \frac{3\mathbf{I}}{7\cdot 35}\\
&= (\mathbf{m}\cdot\mathbf{m}')^3\mathbf{m}\mathbf{m}' - \frac{15}{49}\Xi_2\cdot\Xi_2' + \frac{6}{49}\Xi_2'\cdot\Xi_2 - \frac{3}{7}(\mathbf{m}\cdot\mathbf{m}')^2(\mathbf{m}\mathbf{m}+\mathbf{m}'\mathbf{m}') + \frac{\mathbf{I}}{49}(3\Xi_2:\Xi_2'+\frac{7}{5}).
\end{aligned}
$$

Hence we have

$$
\begin{aligned}
&\frac{4}{\pi L^4 D k_B T} F^{(2)}_{\text{elastic}} \\
=& -\int \Big\{ \Big(\alpha_{11} + \frac{3}{2}\alpha_{12}\Xi_2 : \Xi_2' + \frac{35}{8}\alpha_{13}\Xi_4 : \Xi_4' \Big) \partial_i f(\mathbf{x},\mathbf{m}')\partial_i f(\mathbf{x},\mathbf{m}) \\
&+ \Big(\alpha_{21}(\Xi_2 + \Xi_2' + \frac{2}{3}\mathbf{I}) + 3\alpha_{22}\mathbf{mmmm} : \Xi_2' \Big) \nabla f(\mathbf{x},\mathbf{m}')\nabla f(\mathbf{x},\mathbf{m}) \\
&+ \big(\alpha_{31} - \frac{1}{2}\alpha_{32}\big)\Big(\Xi_2 \cdot \Xi_2' + \Xi_2' \cdot \Xi_2 + \frac{2}{3}\Xi_2 + \frac{2}{3}\Xi_2' + \frac{2}{9}\mathbf{I} \Big) : \nabla f(\mathbf{x},\mathbf{m}')\nabla f(\mathbf{x},\mathbf{m}) \\
&+ \frac{3}{2}\alpha_{32}\Big(\Xi_4 \vdots \Xi_4' + \Xi_4' \vdots \Xi_4 + \frac{9}{49}\Xi_2 \cdot \Xi_2' + \frac{9}{49}\Xi_2' \cdot \Xi_2 + \frac{6}{7}(\mathbf{m}\cdot\mathbf{m}')^2(\mathbf{mm} + \mathbf{m}'\mathbf{m}') \\
&\qquad - \frac{2\mathbf{I}}{49}(3\Xi_2 : \Xi_2' + \frac{7}{5}) \Big) : \nabla f(\mathbf{x},\mathbf{m}')\nabla f(\mathbf{x},\mathbf{m}) \Big\} \mathrm{d}\mathbf{m}'\mathrm{d}\mathbf{m} \\
=& -\int \Big\{ \Big(\alpha_{11} + \frac{3}{2}\alpha_{12}\Xi_2 : \Xi_2' + \frac{35}{8}\alpha_{13}\Xi_4 : \Xi_4' \Big) \partial_i f(\mathbf{x},\mathbf{m}')\partial_i f(\mathbf{x},\mathbf{m}) \\
&+ \Big(\alpha_{21}(\Xi_2 + \Xi_2' + \frac{2}{3}\mathbf{I}) \Big) \nabla f(\mathbf{x},\mathbf{m}')\nabla f(\mathbf{x},\mathbf{m}) \\
&+ \big(\alpha_{31} - \frac{1}{2}\alpha_{32}\big)\Big(\Xi_2 \cdot \Xi_2' + \Xi_2' \cdot \Xi_2 + \frac{2}{3}\Xi_2 + \frac{2}{3}\Xi_2' + \frac{2}{9}\mathbf{I} \Big) : \nabla f(\mathbf{x},\mathbf{m}')\nabla f(\mathbf{x},\mathbf{m}) \\
&+ \frac{3}{2}\alpha_{32}\Big(\Xi_4 \vdots \Xi_4' + \Xi_4' \vdots \Xi_4 + \frac{9}{49}\Xi_2 \cdot \Xi_2' + \frac{9}{49}\Xi_2' \cdot \Xi_2 - \frac{2\mathbf{I}}{49}(3\Xi_2 : \Xi_2' + \frac{7}{5}) + \frac{2}{7}(\Xi_2 + \Xi_2' + \frac{2}{3}\mathbf{I}) \Big) : \nabla f \nabla f' \\
&+ \big(3\alpha_{22} + \frac{9}{7}\alpha_{32}\big)\Big(\Xi_4 : \Xi_2' + \frac{1}{7}\big(2\Xi_2 \cdot \Xi_2' + 2\Xi_2' \cdot \Xi_2 + \mathbf{I}\Xi_2 : \Xi_2'\big) + \frac{2}{15}\Xi_2' \Big) \Big\} : \nabla f \nabla f' \mathrm{d}\mathbf{m}'\mathrm{d}\mathbf{m} \\
=& -\Big\{ \Big(\alpha_{11} + \frac{2}{3}\alpha_{21} + \frac{2}{9}\alpha_{31} - \frac{2}{18}\alpha_{32} + \frac{1}{5}\alpha_{32} \Big) |\nabla c|^2 \\
&+ \Big(\frac{3}{2}\alpha_{12} - \frac{9}{49}\alpha_{32} + \frac{3}{7}\alpha_{22} + \frac{18}{49}\alpha_{32} \Big) |\nabla(cQ_2)|^2 + \frac{35}{8}\alpha_{13}|\nabla(cQ_4)|^2 \\
&+ \Big(2\alpha_{21} + \frac{4}{3}(\alpha_{31} - \frac{1}{2}\alpha_{32}) + \frac{6}{7}\alpha_{32} + \frac{2}{15}(3\alpha_{22} + \frac{18}{7}\alpha_{32}) \Big) \partial_i(cQ_{2ij})\partial_j c \\
&+ \Big(\alpha_{31} - \frac{1}{2}\alpha_{32} + \frac{27}{98}\alpha_{32} + \frac{2}{7}(3\alpha_{22} + \frac{18}{7}\alpha_{32}) \Big) \Big(\partial_i(cQ_{ik})\partial_j(cQ_{jk}) + \partial_i(cQ_{jk})\partial_j(cQ_{ik}) \Big) \\
&+ \frac{3}{2}\alpha_{32}\Big(\partial_i(cQ_{4iklm})\partial_j(cQ_{4jklm}) + \partial_i(cQ_{4jklm})\partial_j(cQ_{4iklm}) \Big) \\
&+ \big(3\alpha_{22} + \frac{18}{7}\alpha_{32}\big)\partial_i(cQ_{4ijkl})\partial_j(cQ_{2kl}) \Big\}.
\end{aligned}
\tag{6.5}
$$

Finally, we get

$$
\begin{aligned}
&\frac{4}{\pi L^4 D k_B T} F^{(2)}_{\text{elastic}} \\
=& -\Big\{\Big(\alpha_{11}+\frac{2}{3}\alpha_{21}+\frac{2}{9}\alpha_{31}+\frac{4}{45}\alpha_{32}\Big)|\nabla c|^2+\Big(\frac{3}{2}\alpha_{12}+\frac{3}{7}\alpha_{22}+\frac{9}{49}\alpha_{32}\Big)|\nabla(cQ_2)|^2 \\
&+\frac{35}{8}\alpha_{13}|\nabla(cQ_4)|^2+\Big(2\alpha_{21}+\frac{4}{3}\alpha_{31}+\frac{2}{5}\alpha_{22}+\frac{8}{15}\alpha_{32}\Big)\partial_i(cQ_{2ij})\partial_j c \\
&+\Big(\alpha_{31}+\frac{25}{49}\alpha_{32}+\frac{6}{7}\alpha_{22}\Big)\Big(\partial_i(cQ_{ik})\partial_j(cQ_{jk})+\partial_i(cQ_{jk})\partial_j(cQ_{ik})\Big) \\
&+\frac{3}{2}\alpha_{32}\Big(\partial_i(cQ_{4iklm})\partial_j(cQ_{4jklm})+\partial_i(cQ_{4jklm})\partial_j(cQ_{4iklm})\Big) \\
&+\big(3\alpha_{22}+\frac{18}{7}\alpha_{32}\big)\partial_i(cQ_{4ijkl})\partial_j(cQ_{2kl})\Big\}. \qquad (6.6)
\end{aligned}
$$

The calculation of fourth moment gives us

$$
\begin{aligned}
&\frac{24}{\pi L^6 D k_B T} F^{(4)}_{\text{elastic}} \\
\approx& \int_\Omega\int_{\mathbb{S}^2}\int_{\mathbb{S}^2}\Big\{2\mu_{11}\ f(\mathbf{x},\mathbf{m})\ m_i m_j m_k m_l\ \partial_{ijkl}\{f(\mathbf{x},\mathbf{m}')\}\mathrm{d}\mathbf{m}'\mathrm{d}\mathbf{m} \\
&\qquad+(\mu_{21}-\frac{1}{2}\mu_{22})f(\mathbf{x},\mathbf{m})(m_i m_j m'_k m'_l)_{\text{sym}}\ \partial_{ijkl}\{f(\mathbf{x},\mathbf{m}')\}\mathrm{d}\mathbf{m}'\mathrm{d}\mathbf{m} \\
&\qquad+\frac{3}{2}\mu_{22}f(\mathbf{x},\mathbf{m})(\mathbf{m}\cdot\mathbf{m}')^2(m_i m_j m'_k m'_l)_{\text{sym}}\ \partial_{ijkl}\{f(\mathbf{x},\mathbf{m}')\}\mathrm{d}\mathbf{m}'\mathrm{d}\mathbf{m}\Big\}\mathrm{d}\mathbf{x}.
\end{aligned}
$$

With periodic boundary condition, we get

$$
\begin{aligned}
&\int c(\mathbf{x})\rho(\mathbf{x},\mathbf{m})\ m_i m_j m_k m_l\ \partial_{ijkl}(c(\mathbf{x})\rho(\mathbf{x},\mathbf{m}'))\ \mathrm{d}\mathbf{m}'\mathrm{d}\mathbf{m}\mathrm{d}\mathbf{x} \\
=&\int c\ \partial_{ijkl}\{c(Q_{4ijkl}+\frac{1}{7}(Q_{2ij}\delta_{kl})_{\text{symmtric}}+\frac{1}{15}(\delta_{ij}\delta_{kl})_{\text{symmtric}})\}\mathrm{d}\mathbf{x} \\
=&\int \partial_{ij}(cQ_{4ijkl})\partial_{kl}(c)+\frac{1}{7}c(\partial_{ijkk}(cQ_{2ij}))_{\text{symmtric}}+\frac{1}{15}c(\partial_{iikk}(c))_{\text{symmtric}}\ \mathrm{d}\mathbf{x} \\
=&\int\Big\{\partial_{ij}(cQ_{4ijkl})\partial_{kl}(c)+\frac{6}{7}\partial_{ij}(cQ_{2ij})\partial_{kk}(c)+\frac{1}{5}(\partial_{ij}(c))^2\Big\}\mathrm{d}\mathbf{x},
\end{aligned}
$$

and

$$
\begin{aligned}
&\int c(\mathbf{x})\rho(\mathbf{x},\mathbf{m})(m_i m_j m'_k m'_l)_{\text{symmtric}}\partial_{ijkl}(c(\mathbf{x})\rho(\mathbf{x},\mathbf{m}'))\ \mathrm{d}\mathbf{m}'\mathrm{d}\mathbf{m}\mathrm{d}\mathbf{x} \\
=&\int\big[c(Q_{2ij}+\frac{1}{3}\delta_{ij})\ \partial_{ijkl}(c(Q_{2kl}+\frac{1}{3}\delta_{kl}))\big]_{\text{symmtric}}\ \mathrm{d}\mathbf{x} \\
=&\int\Big\{6\partial_{ij}(cQ_{2ij})\partial_{kl}(cQ_{2kl})+4\partial_{ij}(cQ_{2ij})\partial_{kk}(c)+\frac{2}{3}(\partial_{ij}(c))^2\Big\}\mathrm{d}\mathbf{x}.
\end{aligned}
$$

In addition, we can derive that

$$
\begin{aligned}
&\int c(\mathbf{x})\rho(\mathbf{x},\mathbf{m})(\mathbf{m}\cdot\mathbf{m}')^2(m_i m_j m_k' m_l')_{\text{symmtric}}\partial_{ijkl}(c(\mathbf{x})\rho(\mathbf{x},\mathbf{m}'))\ \mathrm{d}\mathbf{m}'\mathrm{d}\mathbf{m}\mathrm{d}\mathbf{x}\\
=&6\int c\Big(Q_{4ijkl}+\frac{1}{7}(Q_{2ij}\delta_{kl})_{\text{symmtric}}+\frac{1}{15}(\delta_{ij}\delta_{kl})_{\text{symmtric}}\Big)\\
&\cdot\partial_{ijkl}\Big\{(c(Q_{4ijkl}+\frac{1}{7}(Q_{2ij}\delta_{kl})_{\text{symmtric}}+\frac{1}{15}(\delta_{ij}\delta_{kl})_{\text{symmtric}})\Big\}\ \mathrm{d}\mathbf{x}\\
=&\int\Big\{6\partial_{ij}(cQ_{4ijpq})\partial_{kl}(cQ_{4klpq})+\Big(\frac{114}{49}\partial_{ij}(cQ_{2ij})\partial_{kl}(cQ_{2kl})+\frac{96}{49}\partial_{ik}(cQ_{2ip})\partial_{jk}(cQ_{2jp})\\
&+\frac{12}{49}\partial_{ij}(cQ_{2ij})\partial_{kk}(cQ_{2pp})+\frac{6}{49}\partial_{ij}(cQ_{2pq})\partial_{ij}(cQ_{2pq})\Big)+\frac{22}{75}\partial_{ij}(c)\partial_{ij}(c)\\
&+\Big(\frac{12}{7}\partial_{ij}(cQ_{4ijpp})\partial_{kl}(cQ_{2kl})+\frac{48}{7}\partial_{ij}(cQ_{4ijkp})\partial_{kl}(cQ_{2lp})+\frac{12}{7}\partial_{ij}(cQ_{4ijpq})\partial_{kk}(cQ_{2pq})\Big)\\
&+\Big(\frac{4}{5}\partial_{ij}(cQ_{4ijpp})\partial_{kk}(c)+\frac{8}{5}\partial_{ij}(cQ_{4ijkl})\partial_{kl}(c)\Big)\\
&+\Big(\frac{76}{35}\partial_{ij}(cQ_{2ij})\partial_{kk}(c)+\frac{4}{35}\partial_{ij}(cQ_{2pp})\partial_{ij}(c)\Big)\Big\}\mathrm{d}\mathbf{x}.
\end{aligned}
$$

Together with the trace free property of Q-tensor, we sum up to obtain the fourth term as

$$
\begin{aligned}
&\frac{24}{\pi L^6 D k_B T}F^{(4)}_{\text{elastic}}\\
\approx&\int\Big\{(9\mu_{22})\partial_{ij}(cQ_{4ijpq})\partial_{kl}(cQ_{4klpq})+\Big((6\mu_{21}+\frac{24}{49}\mu_{22})\partial_{ij}(cQ_{2ij})\partial_{kl}(cQ_{2kl})\\
&+(\frac{144}{49}\mu_{22})\partial_{ik}(cQ_{2ip})\partial_{jk}(cQ_{2jp})+(\frac{9}{49}\mu_{22})\partial_{ij}(cQ_{2pq})\partial_{ij}(cQ_{2pq})\Big)\\
&+(\frac{2}{5}\mu_{11}+\frac{2}{3}\mu_{21}+\frac{8}{75}\mu_{22})\partial_{ij}(c)\partial_{ij}(c)+\Big((\frac{72}{7}\mu_{22})\partial_{ij}(cQ_{4ijkp})\partial_{kl}(cQ_{2lp})\\
&+(\frac{18}{7}\mu_{22})\partial_{ij}(cQ_{4ijpq})\partial_{kk}(cQ_{2pq})\Big)+(2\mu_{11}+\frac{12}{5}\mu_{22})\partial_{ij}(cQ_{4ijkl})\partial_{kl}(c)\\
&+(\frac{12}{7}\mu_{11}+4\mu_{21}+\frac{44}{35}\mu_{22})\partial_{ij}(cQ_{2ij})\partial_{kk}(c)\Big\}\mathrm{d}\mathbf{x}.
\end{aligned}
\tag{6.7}
$$

6.4 Calculation of coefficients in Oseen-Frank energy deduced from the tensor model

We denote

$$
I_1=(\nabla\cdot\mathbf{n})^2,\quad I_2=(\mathbf{n}\cdot\nabla\times\mathbf{n})^2,\quad I_3=|\mathbf{n}\times(\nabla\times\mathbf{n})|^2,\quad I_4=\mathrm{tr}(\nabla\mathbf{n})^2-(\nabla\cdot\mathbf{n})^2.
$$

Then we can easily get that:

$$
(\partial_i n_i)^2=I_1,\quad (n_i\partial_i n_k)^2=I_3,\quad \partial_i n_j\partial_j n_i=I_1+I_4,\quad (\partial_i n_j)^2=I_1+I_2+I_3+I_4. \tag{6.8}
$$

From the identity

$$
\begin{aligned}
Q_{4jklm}=&S_4\Big(n_i n_k n_j n_l-\frac{1}{7}\big(n_i n_j\delta_{kl}+n_i n_k\delta jl+n_i n_l\delta_{jk}\\
&+n_k n_l\delta_{ij}+n_j n_l\delta_{ik}+n_j n_k\delta_{il}\big)+\frac{1}{35}\big(\delta_{ij}\delta_{kl}+\delta_{il}\delta_{jk}+\delta_{ik}\delta_{jl}\big)\Big),
\end{aligned}
\tag{6.9}
$$

and the fact that $Q_{ijkk} = Q_{ijjk} = \cdots = 0$, we have

$$
\begin{aligned}
|\nabla(cQ_4)|^2 =& S_4^2\partial_h\Big(n_in_kn_jn_l - \frac{1}{7}\big(n_in_j\delta_{kl} + n_in_k\delta_{jl} + n_in_l\delta_{jk} + n_kn_l\delta_{ij} \\
&+ n_jn_l\delta_{ik} + n_jn_k\delta_{il}\big) + \frac{1}{35}\big(\delta_{ij}\delta_{kl} + \delta_{il}\delta_{jk} + \delta_{ik}\delta_{jl}\big)\Big)\partial_h(n_in_kn_jn_l) \\
=& 4S_4^2\partial_h\Big(n_in_kn_jn_l - \frac{1}{7}\big(n_in_j\delta_{kl} + n_in_k\delta_{jl} + n_in_l\delta_{jk} + n_kn_l\delta_{ij} \\
&+ n_jn_l\delta_{ik} + n_jn_k\delta_{il}\big) + \frac{1}{35}\big(\delta_{ij}\delta_{kl} + \delta_{il}\delta_{jk} + \delta_{ik}\delta_{jl}\big)\Big)n_kn_jn_l\partial_hn_i \\
=& 4S_4^2\Big((\partial_hn_i)^2 - \frac{3}{7}(\partial_hn_i)^2\Big) = \frac{16}{7}S_4^2(I_1 + I_2 + I_3 + I_4).
\end{aligned} \tag{6.10}
$$

Similarly, we can obtain

$$
\begin{aligned}
&\partial_i(cQ_{4iklm})\partial_j(cQ_{4jklm}) = S_4^2\big(\frac{46}{49}I_1 + \frac{6}{49}I_2 + \frac{60}{49}I_3 + \frac{12}{49}I_4\big), \\
&\partial_i(cQ_{4jklm})\partial_j(cQ_{4iklm}) = S_4^2\big(\frac{46}{49}I_1 + \frac{6}{49}I_2 + \frac{60}{49}I_3 + \frac{40}{49}I_4\big), \\
&\partial_i(cQ_{4ijkl})\partial_j(cQ_{2kl}) = S_4S_2\Big(\frac{8}{7}I_3 - \frac{2}{7}(3I_1 + I_2 + 2I_4)\Big), \\
&|\nabla(cQ_2)|^2 = 2S_2^2(I_1 + I_2 + I_3 + I_4), \\
&\partial_i(cQ_{ik})\partial_j(cQ_{jk}) = S_2^2(I_1 + I_3), \\
&\partial_i(cQ_{jk})\partial_j(cQ_{ik}) = S_2^2\Big(I_1 + I_3 + I_4\Big).
\end{aligned}
$$

Substituting the above equalities into (3.12), we can get that

$$
\begin{aligned}
F^{(2)}_{\text{elastic}} =& \frac{c^2}{2}\int_\Omega \Big\{2J_2S_2^2(I_1 + I_2 + I_3 + I_4) + J_3\frac{16}{7}S_4^2(I_1 + I_2 + I_3 + I_4) \\
&+ J_5\Big(S_2^2(I_1 + I_3) + S_2^2(I_1 + I_3 + I_4)\Big) + J_7S_2S_4\Big(\frac{8}{7}I_3 - \frac{2}{7}(3I_1 + I_2 + 2I_4)\Big) \\
&+ J_6\Big(S_4^2\big(\frac{46}{49}I_1 + \frac{6}{49}I_2 + \frac{60}{49}I_3 + \frac{12}{49}I_4\big) + S_4^2\big(\frac{46}{49}I_1 + \frac{6}{49}I_2 + \frac{60}{49}I_3 + \frac{40}{49}I_4\big)\Big)\Big\}\mathrm{d}\mathbf{x}.
\end{aligned}
$$

Therefore, we have

$$
\begin{aligned}
&K_1 = c^2\Big(2S_2^2(J_2 + J_5) + S_4^2\big(\frac{16}{7}J_3 + \frac{92}{49}J_6\big) - \frac{6}{7}J_7S_2S_4\Big), \\
&K_2 = c^2\Big(2S_2^2J_2 + S_4^2\big(\frac{16}{7}J_3 + \frac{12}{49}J_6\big) - \frac{2}{7}J_7S_2S_4\Big), \\
&K_3 = c^2\Big(2S_2^2(J_2 + J_5) + S_4^2\big(\frac{16}{7}J_3 + \frac{120}{49}J_6\big) + \frac{8}{7}J_7S_2S_4\Big), \\
&K_4 = c^2\Big(S_2^2J_5 + \frac{40}{49}J_6S_4^2 - \frac{2}{7}J_7S_2S_4\Big).
\end{aligned}
$$

Substituting the expressions of J_i:

$$
\begin{aligned}
&J_2 = -\frac{\pi}{2}L^5\eta k_BT\Big(\frac{3}{2}\alpha_{12} + \frac{3}{7}\alpha_{22} + \frac{9}{49}\alpha_{32}\Big), \qquad J_3 = -\frac{35\pi}{16}L^5\eta k_BT\alpha_{13}, \\
&J_5 = -\frac{\pi}{2}L^5\eta k_BT\Big(\alpha_{31} + \frac{25}{49}\alpha_{32} + \frac{6}{7}\alpha_{22}\Big), \\
&J_6 = -\frac{3\pi}{4}L^5\eta k_BT\alpha_{32}, \qquad J_7 = -\frac{\pi}{2}L^5\eta k_BT\big(3\alpha_{22} + \frac{18}{7}\alpha_{32}\big).
\end{aligned}
$$

into it, the elastic coefficients can be written as

$$
\begin{aligned}
K_1 = \pi c^2 L^5 \eta k_B T\Big(&- S_2^2\Big(\eta^2\frac{299}{1568} - \frac{15}{7\cdot 64} - \frac{12\ln 2\eta^2}{49}\Big) + S_4^2\Big(\frac{15\eta^2}{128} - \frac{115\eta^2}{49}\Big(\frac{1}{8} - \frac{\ln 2}{2}\Big)\Big)\\
&+ S_2S_4\frac{15}{7}\Big(-\frac{1}{64} + \frac{5\eta^2}{14} - \frac{3}{7}\eta^2\ln 2\Big)\Big),\\
K_2 = \pi c^2 L^5 \eta k_B T\Big(&- 5S_2^2\Big(\eta^2\frac{19}{1568} - \frac{1}{7\cdot 64} - \frac{3\ln 2\eta^2}{98}\Big) + S_4^2\Big(\frac{15\eta^2}{128} - \frac{15}{49}\eta^2\Big(\frac{1}{8} - \frac{\ln 2}{2}\Big)\Big)\\
&+ S_2S_4\frac{5}{7}\Big(-\frac{1}{64} + \frac{5\eta^2}{14} - \frac{3}{7}\eta^2\ln 2\Big)\Big),\\
K_3 = \pi c^2 L^5 \eta k_B T\Big(&- S_2^2\Big(\eta^2\frac{299}{1568} - \frac{15}{7\cdot 64} - \frac{12\ln 2\eta^2}{49}\Big) + S_4^2\Big(\frac{15\eta^2}{128} - \frac{150}{49}\eta^2\Big(\frac{1}{8} - \frac{\ln 2}{2}\Big)\Big)\\
&- S_2S_4\frac{20}{7}\Big(-\frac{1}{64} + \frac{5\eta^2}{14} - \frac{3\ln 2\eta^2}{7}\Big)\Big),\\
K_4 = \pi c^2 L^5 \eta k_B T\Big(&\frac{S_2^2}{2}\Big(\frac{9\ln 2\eta^2}{98} - \frac{51\eta^2}{392} + \frac{5}{7\cdot 32}\Big) - S_4^2\frac{25\eta^2}{49}\Big(\frac{1}{4} - \ln 2\Big)\\
&+ S_2S_4\frac{5}{7}\Big(-\frac{1}{64} + \frac{5\eta^2}{14} - \frac{3\ln 2\eta^2}{7}\Big)\Big).
\end{aligned}
$$

Acknowledgments. The authors are grateful to Prof. Zhifei Zhang for his suggestions which helped improve the paper greatly. The authors also would like to thank Dr. Weiquan Xu for his help on numerical simulation. P. Zhang is partly supported by NSF of China under Grant 50930003 and 21274005.

References

[1] M. P. Allen and D. Frenkel, *Calculation of liquid-crystal Frank constants by computer simulation*, Phys. Rev. A, 37, 1813-1816(1988).

[2] C. Bingham. *An antipodally symmetric distribution on the sphere*, Ann. Stat., **2**, 1201-1225 (1974)

[3] J. M. Ball and A. Majumdar, *Nematic liquid crystals: from Maier-Saupe to a continuum theory*, Mol. Cryst. Liq. Cryst., 525, 1-11(2010).

[4] J. M. Ball and A. Zarnescu, *Orientable and non-orientable line field models for uniaxial nematic liquid crystals*, Mol. Cryst. Liq. Cryst., **495**,1, 221-233(2008).

[5] S. A. Brazovskii, *Phase transition of an isotropic system to a nonuniform state*, Sov. Phys. JETP, Vol.41, p.85 (1975).

[6] J. Chen and T. Lubensky, *Landau-ginzburg mean-field theory for the nematic to smectic c and nematic to smectic a liquid crystal transistions*, Phys. Rev. A, 14, 1202-1297(1976).

[7] C. V. Chaubal and L. G. Leal. *A closure approximation for liquid-crystalline polymermodels based on parametric density estimation*, Journal of Rheology, 42(1), 177-201(1998).

[8] C. V. Chaubal, L. G. Leal and G. H. Fredrickson, *A comparison of closure approximations for the Doi theory of LCPs*, J. Rheol., 39, 73-103(1995).

[9] N. F. Carnahan and K. E. Starling, *Equation of state for nonattracting rigid spheres*, J. Chem. Phys, 51, 635(1969).

[10] M. Doi and S. F. Edwards, *The theory of polymer dynamics*, Oxford University Press, USA, 1988.

[11] P.G. de Gennes and J. Prost, *The physics of liquid crystals*, Oxford University Press, USA, 1995.

[12] G. Durand, L. Lger, F. Rondelez and M. Veyssie, *Quasielastic Rayleigh Scattering in Nematic Liquid Crystals*, Phys. Rev. Lett., 22(25), 1361-1363(1969).

[13] M. Doi, *Molecular dynamics and rheological properties of concentrated solutions of rod like polymers in isotropic and liquid crystalline phases*, Journal of Polymer Science: Polymer Physics Edition, **19**, 229-243(1981).

[14] J. L. Ericksen, *Conservation laws for liquid crystals*, Journal of Rheology, **5**, 23,(1961).

[15] J. L. Ericksen, *Liquid crystals with variable degree of orientation*, Archive for Rational Mechanics and Analysis, 113(2), 97-120(1991).

[16] W. E and P. Zhang, *Ericksen-Leslie equation derived from a molecular kinetic equation under small Deborah number*, Methods and applications of analysis, **13**(2), 181-198(2006).

[17] J. Feng, C. V. Chaubal and L. G. Leal, *Closure approximations for the Doi theory: Which to use in simulating complex flows of liquid-crystalline polymers?*, Journal of Rheology, **42**, 1095(1998).

[18] I. Fatkullin and V. Slastikov, *Critical points of the Onsager functional on a sphere*, Nonlinearity, **18**, 2565-2580(2005).

[19] J.J. Feng, G. Sgalari and L.G. Leal, *A theory for flowing nematic polymers with orientational distortion*, Journal of Rheology, **44**(5), 1085-1101(2000).

[20] V. Frederiks and V. Zolina, *Forces causing the orentation of an anisotropic liquid*, Trans. Faraday Soc. **29**, 919(1933)

[21] M. Grosso, P. L. Maffettone and F. Dupret. *A closure approximation for nematic liquid crystals based on the canonical distribution subspace theory*, Rheologica Acta, 39, 301-310(2000).

[22] R. M. Hornreich and S. Shtrikman *Landau theory of blue phases*, Mol. Cryst. Liq. Cryst., 165, 183-211(1988).

[23] P. Ilg, I.V. Karlin, M. Kröger and H.C. Öttinger, *Canonical distribution functions in polymer dynamics (II): Liquid-crystalline polymers*, Physica A, 319, 134-150(2003).

[24] N. Kuzuu and M. Doi, *Constitutive equation for nematic liquid crystals under weak velocity gradient derived from a molecular kinetic equation*, Journal of the Physical Society of Japan, **52**(10), 3486-3494(1983).

[25] S.-D. Lee, and R. B. Meyer, *Computations of the phase equilibrium, elastic constants, and viscosities of a hard-rod nematic liquid crystal*, J. Chem. Phys., 84(6), 3443-3448 (1986);

[26] H. Liu, H. Zhang, and P. Zhang, *Axial symmeetry and classification of stationary solutions of doi-onsager equation on the sphere with maier-saupe potential*, Comm. Math. Sci, **3**(2), 201-218(2005).

[27] A. Majumdar, *Equilibrium order parameters of liquid crystals in the Landau-De Gennes theory*, European Journal of Applied Mathematics, 21(02), 181-203(2010).

[28] W. L. McMillan, *Simple molecular model for the smectic A phase of liquid crystals*, Phys. Rev. A, **4**, 1238(1971).

[29] G. Marrucci and F. Greco, *The elastic constants of maier-saupe rodlike molecule nematics*, Mol. Cryst. Liq. Cryst, **206**, 17-30(1991).

[30] N.J. Mottram and C. Newton, *Introduction to Q-tensor Theory*, University of Strathclyde, Department of Mathematics, Research Report, (2004).

[31] W. Maier and A. Saupe, *Eine einfache molekulare theories des nametischen kristallinflüssigen Zustandes*, Z. Naturf. A, **14a**, 882(1959).

[32] W. Maier and A. Saupe, *Eine einfache molekulare theories des nametischen kristallinflüssigen Zustandes. II*, Z. Naturf. A, **15a**, 287(1960).

[33] A. Majumdar and A. Zarnescu, *Landau-De Gennes Theory of Nematic Liquid Crystals: the Oseen-Frank Limit and Beyond*, Archive for Rational Mechanics and Analysis, 196(1), 227-280(2009).

[34] L. Onsager, *The effect of shapes on the interation of colloidal particles*, Ann NY. Acad. Sci., **51**:627,(1949).

[35] C.W. Oseen, *The theory of liquid crystals*, Transactions of the Faraday Society **29** , no. 140, 883-899(1933).

[36] J. Prost and H. Gasparoux, *Determination of twist viscosity coefficient in the nematic mesophases*, Physics Letters A, Vol.36(3), 245-246 (1971).

[37] A. Srivastava and S. Singh, *Elastic constants of nematic liquid crystals of uniaxial symmetry*, J. Phys.: Condens. Matter, 16(41), 7169 (2004).

[38] R. Tao, P. Sheng and Z. F. Lin, *Nematic-Isotropic Phase Transition: An Extended Mean Field Theory*, Phys. Rev. Lett., 70, 1271(1993).

[39] Q. Wang, *Biaxial steady states and their stability in shear flows of liquid crystal polymers*, Journal of Rheology, **41**, 943-970(1997).

[40] Q. Wang, W. E, C. Liu, and P. Zhang, *Kinetic theory for flows of nonhomogeneous rodlike liquid crystalline polymers with a nonlocal intermolecular potential*, Physical Review E, **65**, 051504(2002).

[41] W. Wang, P. Zhang and Z. Zhang, *The small Deborah number limit of the Doi-Onsager equation to the Ericksen-Leslie equation*, arXiv:1206.5480.

[42] W. Wang, P. Zhang and Z. Zhang, *From microscopic theory to macroscopic theory: dynamics of the rod-like liquid crystal molecules*, preprint, 2013.

[43] J. Xu and P. Zhang, *From Molecular Symmetry to Order Parameters*, preprint, 2013.

[44] H. Yu, G. Ji and P. Zhang, *A Nonhomogeneous Kinetic Model of Liquid Crystal Polymers and Its Thermodynamic Closure Approximation*, Commun. Comput. Phys., 7(2), 383-402(2010)

[45] H. Yu and P. Zhang, *A kinetic-hydrodynamic simulation of microstructure of liquid crystal polymers in plane shear flow*, J. Non-Newtonian Fluid Mech., **141**, 116-127(2007).